AREA MAP

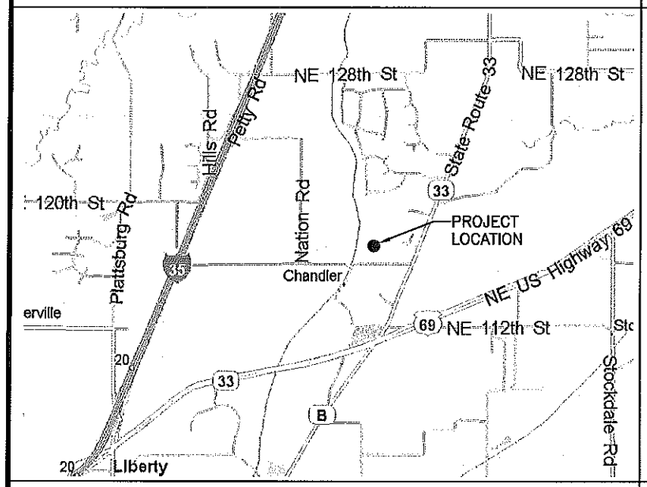

VICINITY MAP

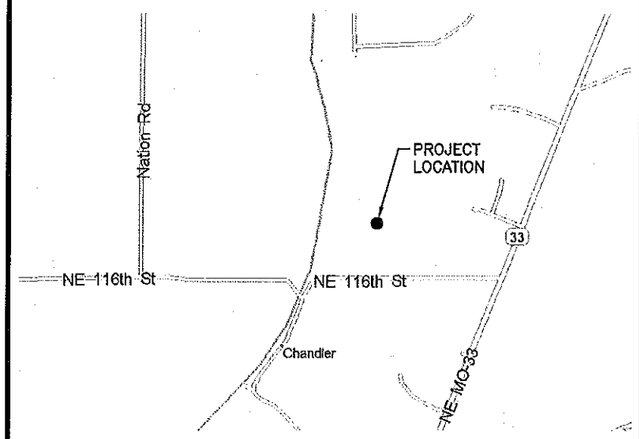

DRIVING DIRECTIONS

DRIVE TO DIRECTIONS AS FOLLOWS:

DEPART FROM THE INTERSECTION OF I-435 & I-35 IN KANSAS CITY, MO. TAKE I-35 NORTH (6.7 MI) TO US-69. TAKE US-69 NORTHEAST (2.6 MI) TO MO-33. TAKE MO-33 NORTH (0.2 MI) TO NE 116TH ST. TAKE NE 116TH ST WEST TO SITE ACCESS DRIVE. TAKE SITE ACCESS DRIVE NORTH THEN WEST TO THE SITE LOCATION. SITE IS LOCATED ON NORTH SIDE OF NE 116TH ST.

CODE COMPLIANCE

ALL WORK SHALL BE PERFORMED AND MATERIALS INSTALLED IN ACCORDANCE WITH THE CURRENT EDITIONS OF THE FOLLOWING CODES AS ADOPTED BY THE LOCAL GOVERNING AUTHORITIES. NOTHING IN THESE PLANS IS TO BE CONSTRUED TO PERMIT WORK NOT CONFORMING TO THESE CODES.

1. INTERNATIONAL BUILDING CODE
2. INTERNATIONAL MECHANICAL CODE
3. ANSI/TIA-222 STRUCTURAL STANDARD
4. NFPA 780 – LIGHTNING PROTECTION CODE
5. UNIFORM PLUMBING CODE
6. NATIONAL ELECTRICAL CODE

PROJECT INFORMATION

PROPERTY OWNER: CLAY COUNTY

CONTACT: MATT TAPP
OFFICE: (816) 407-3380

E-911 ADDRESS: 16530 NE 116TH STREET
KEARNEY, MO 64060

STRUCTURAL INFORMATION:

LATITUDE:	39° 18' 17.010" N
LONGITUDE:	94° 22' 40.784" W
GROUND ELEV:	883' AMSL
OVERALL TOWER HT:	255'-0" AGL
TOWER HT:	240'-0" AGL
ANTENNA CL:	VARIES (SEE A-3)

CONSULTING TEAM

ENGINEER:

SSC, INC.
9900 WEST 109TH STREET, SUITE 300
OVERLAND PARK, KANSAS 66210
PHONE: (913) 438-7700
FAX: (913) 438-7777

M.L. OWENS - LEAD ENGINEER

S.D. KEISLING - LEAD ELECTRICAL

J.R. HILL - LEAD DESIGNER

APPROVALS

CONSTRUCTION MANAGER	PHONE	DATE
RF ENGINEER	PHONE	DATE
SSC	PHONE	DATE
PROPERTY OWNER	PHONE	DATE

UTILITY INFORMATION

THE UTILITIES AS SHOWN ON THIS SET OF DRAWINGS WERE DEVELOPED FROM THE INFORMATION AVAILABLE. THE INFORMATION PROVIDED IS NOT IMPLIED NOR INTENDED TO BE THE COMPLETE INVENTORY OF UTILITIES IN THIS AREA. IT IS THE CONTRACTOR'S RESPONSIBILITY TO VERIFY THE LOCATION OF ALL UTILITIES (WHETHER SHOWN OR NOT) AND PROTECT SAID UTILITIES FROM ANY DAMAGE CAUSED BY CONTRACTOR'S ACTIVITIES.

811 Know what's below. Call before you dig. www.call811.com

POWER COMPANY: AMERON

TELCO COMPANY:

DRAWING INDEX

SHEET NUMBER	TITLE DESCRIPTION	REVISION	RESPONSIBLE DISCIPLINE
T-1	TITLE SHEET	0	SC
	TOPOGRAPHIC SURVEY		
C-1	GRADING PLAN	0	SC
A-1	OVERALL SITE PLAN	0	SC
A-2	ENLARGED SITE PLAN	0	SC
A-3	TOWER ELEVATION & ANTENNA DETAILS	0	SC
A-4	SHELTER FOUNDATION PLAN & DETAILS	0	SC
A-5	SHELTER ELEVATIONS	0	SC
A-6	ICE BRIDGE & FENCE DETAILS	0	SC
E-1	OVERALL UTILITY PLAN	0	E
E-2	ENLARGED UTILITY PLAN & ONE-LINE DIAGRAM	0	E
E-3	UTILITY RACK ELEVATION	0	E
E-4	TELCO RACK ELEVATION	0	E
E-5	UTILITY DETAILS	0	E
G-1	GROUNDING PLAN	0	E
G-2	GROUNDING RISER DIAGRAM	0	E
G-3	GROUNDING DETAILS	0	E
G-4	GROUNDING DETAILS	0	E
SP-1	SPECIFICATION (1 OF 7)	0	SC
SP-2	SPECIFICATION (2 OF 7)	0	SC
SP-3	SPECIFICATION (3 OF 7)	0	SC
SP-4	SPECIFICATION (4 OF 7)	0	SC
SP-5	SPECIFICATION (5 OF 7)	0	SC
SP-6	SPECIFICATION (6 OF 7)	0	E
SP-7	SPECIFICATION (7 OF 7)	0	E

SITE NAME
CLAY COUNTY TOWER

STATE OF MISSOURI
ROBERT E. JENSEN
NUMBER PE-026974
PROFESSIONAL ENGINEER
6/30/14

STATE OF MISSOURI
SHELTON KEISLING
NUMBER E-27320
PROFESSIONAL ENGINEER

PLANS PREPARED FOR:
SKW
11250 Corporate Ave.
Lenexa, Kansas 66219
Phone: 913-888-7800
Fax: 913-438-7868

PLANS PREPARED BY:
SSC
9900 West 109th Street, Suite 300
Overland Park, Kansas 66210
Phone: 913-438-7700
Fax: 913-438-7777

ENGINEERING LICENSE:
STATE OF MISSOURI
PE CERTIFICATE OF AUTHORIZATION #001640

	ENGINEER:	PE #:	DISCIPLINE:	
MLO	MICHAEL L. OWENS	E-28058	STRUCTURAL/CIVIL	SC
KV	KEVIN VANDABLE	E-21561	STRUCTURAL/CIVIL	SC
REJ	ROBERT E. JENSEN	E-26974	STRUCTURAL/CIVIL	SC
TMS	TERRANCE M. SUPER	E-18521	ELECTRICAL	E
SDK	SHELTON D. KEISLING	E-27320	ELECTRICAL	E
DEK	DAVE E. KASPER	E-18063	ELECTRICAL	E

DRAWING NOTICE:

THIS DRAWING HAS NOT BEEN PUBLISHED AND IS THE SOLE PROPERTY OF SSC, INC. AND IS LENT TO THE BORROWER FOR THEIR CONFIDENTIAL USE ONLY. AND IN CONSIDERATION OF THE LOAN OF THIS DRAWING, THE BORROWER PROMISES AND AGREES TO RETURN IT UPON REQUEST AND AGREES THAT IT WILL NOT BE REPRODUCED, COPIED, LENT OR OTHERWISE DISPOSED OF DIRECTLY OR INDIRECTLY, NOR USED FOR ANY PURPOSE OTHER THAN FOR WHICH IT IS FURNISHED.

SUBMITTALS

DESCRIPTION	DATE	BY	REV
ISSUED FOR REVIEW	03/19/14	JRH	A
ISSUED FOR CONSTRUCTION	06/24/14	DCP	0

SITE NAME:
CLAY COUNTY TOWER

SITE NUMBER:

SITE ADDRESS:
16530 NE 116TH ST
KEARNEY, MISSOURI
64060

SHEET DESCRIPTION:
TITLE SHEET

SSC #:

SHEET NUMBER:
T-1

CLAY COUNTY TOWER
PART OF SEC. 22, T. 52N, R. 31W, IN CLAY COUNTY, MISSOURI

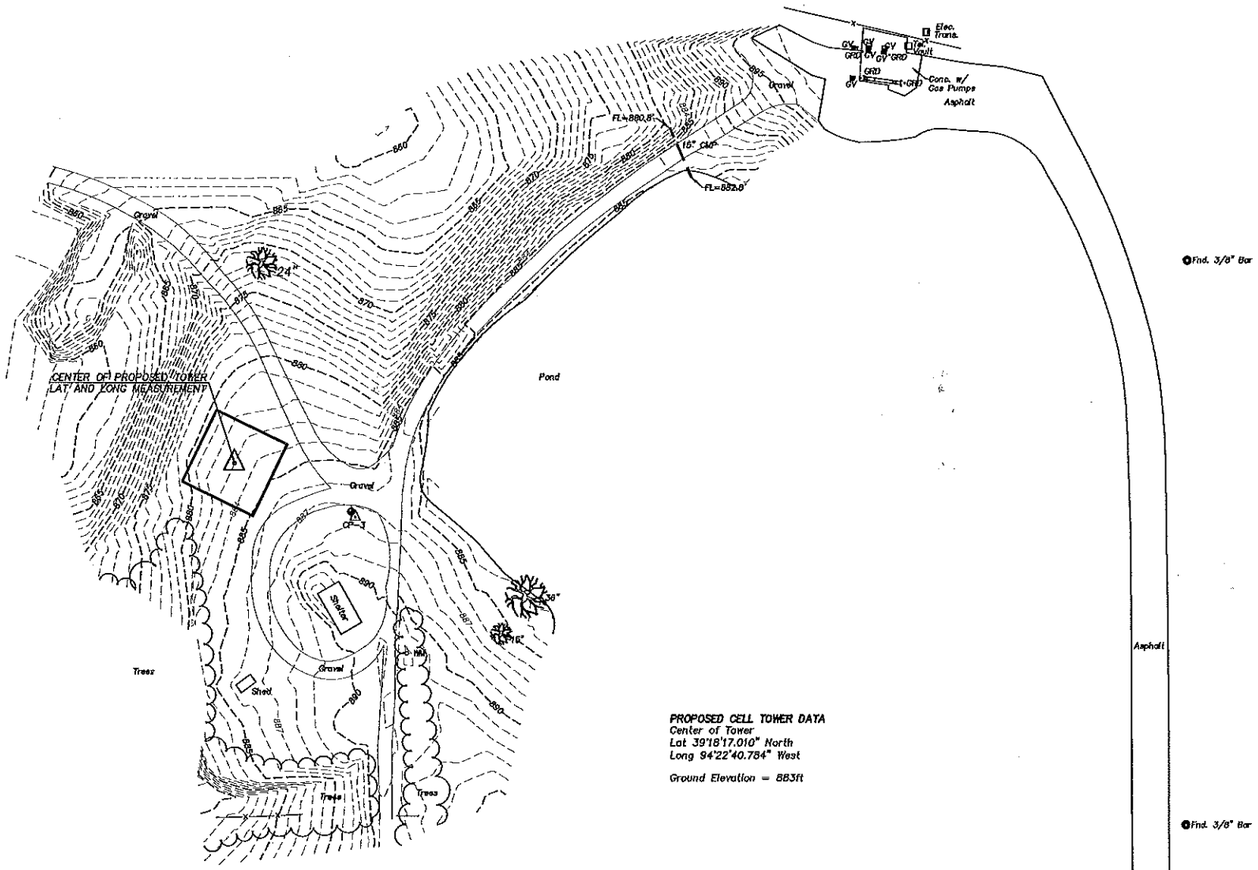

PROPOSED CELL TOWER DATA
Center of Tower
Lat 39°18'17.010" North
Long 94°22'40.784" West

Ground Elevation = 883ft

BENCH MARK
Top of 1/2" Iron Bar w/
Control Cap at CP-3
Elevation = 887.83ft

LEGEND

POWER POLE	PP
TELEPHONE VAULT	Tel. Vault
ELECTRIC TRANSFORMER	Elec. Trans.
GAS VALVE	GV
WATER VALVE	WV
BENCHMARK	
CONTROL POINT	
GUARD POST	GRD
PROPERTY CORNER	
TOWER POINT	
TREE (DIA.)	
TREE LINE	
FENCE	—X— x —X—
OVERHEAD POWER LINE	OHP

A current Title Commitment had not been provided by the owners as of the date of issuance of this Plat of Survey. This company has made no investigation or independent search for easements of record, encumbrances, restrictive covenants, ownership title evidence, or any other facts that an accurate and current title search may disclose.

Notes:

Bearings shown hereon are based on Missouri State Plane Coordinate System of 1983 (NAD 83).

Coordinates were derived using GPS Static Survey methods and post processed data with Magellan/Ashtech receivers and "Locus System" processor software.

Set 1/2" iron bar at Lease corners unless otherwise noted.

The purpose of this survey is to establish and describe a Lease Parcel and associated easements. This is not a boundary survey of the Parent Parcel.

The utilities as shown on this drawing were developed from the information available (existing utility maps, aboveground observations and or surface markings placed on the ground by the utility company or a representative thereof). This company has made no attempt to excavate or go below surface to locate utilities and does not extend or imply a guaranty or warranty as to the exact location of or complete inventory of utilities in this area. It shall be the contractors responsibility to verify the location and depth of all utilities (whether shown or not) prior to excavation or construction and to protect said utilities from damage.

CERTIFICATION:

I HEREBY CERTIFY THAT A SURVEY WAS MADE BY ME, OR UNDER MY DIRECT SUPERVISION, ON THE GROUND OF THE LEASE AREA, LEASE ACCESS EASEMENT, AND LEASE UTILITY EASEMENT PREMISES HEREIN DESCRIBED, AND THE RESULTS OF SAID SURVEY ARE REPRESENTED HEREON. THIS SURVEY WAS EXECUTED IN ACCORDANCE WITH THE CURRENT MINIMUM STANDARDS FOR PROPERTY BOUNDARY SURVEYS OVER SAID LEASE PREMISES TO THE BEST OF MY PROFESSIONAL KNOWLEDGE AND BELIEF.

PRELIMINARY

JEFFREY B. LOVELACE MO-LS2580

DATE:_____

12-11-13: ADDED TOWER INFO

Certificate of Authority:
Missouri – 2002026538
Kansas – LS-154

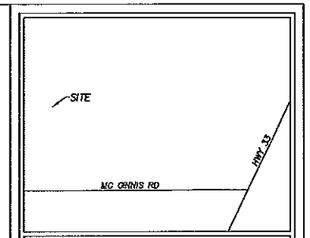

SSC
9900 W. 109th St., Suite 300
Overland Park, Kansas 66210
Phone: 913-438-7700
Fax: 913-438-7777

LOVELACE & ASSOCIATES
Land Surveying - Land Planning
Telecommunications Surveys
929 SE 3rd Street Lee's Summit, Missouri 64063
Phone: (816) 347-9997 Fax: (816) 347-9979

SURVEY COORDINATED BY:
LOVELACE AND ASSOCIATES, LLC
P.O. BOX 68,
LEE'S SUMMIT, MO 64063
TELEPHONE: 816-347-9997
FAX: 816-347-9979

SURVEY PROVIDED BY:
LOVELACE AND ASSOCIATES, LLC
P.O. BOX 68,
LEE'S SUMMIT, MO 64063
TELEPHONE: 816-347-9997
FAX: 816-347-9979

SURVEY PROVIDED FOR:
SSC
9900 W. 109TH STREET,
SUITE 300
OVERLAND PARK, KS 66210
TELEPHONE: 913-438-7700

SCALE 1" = 60'
60' 0 60' 120'

FLOOD NOTE:
According to my interpretations of Community Panel No. 2900960004B of the Flood Insurance Rate Map for Clay County, Missouri, dated 02-01-1985, the subject property is in Flood Zone "C", ie. "areas determined to be of minimal flooding". (Area outside 100-year flood plain)

CALL BEFORE YOU
DIG - DRILL - BLAST
1-800-344-7483
(TOLL FREE)
MISSOURI ONE CALL SYSTEM, INC.

SITE I.D.: NA
SITE NAME: CLAY COUNTY TOWER
SITE LOCATION:
CITY OF KEARNEY,
CLAY COUNTY, MO
LA PROJECT NO.: 13513
DRAWN BY: A.C.T.
CHECKED BY: J.B.L.
DATE: 12-03-13
FIELDWORK DATE: 11-25-13

SHEET NUMBER
1 OF 1

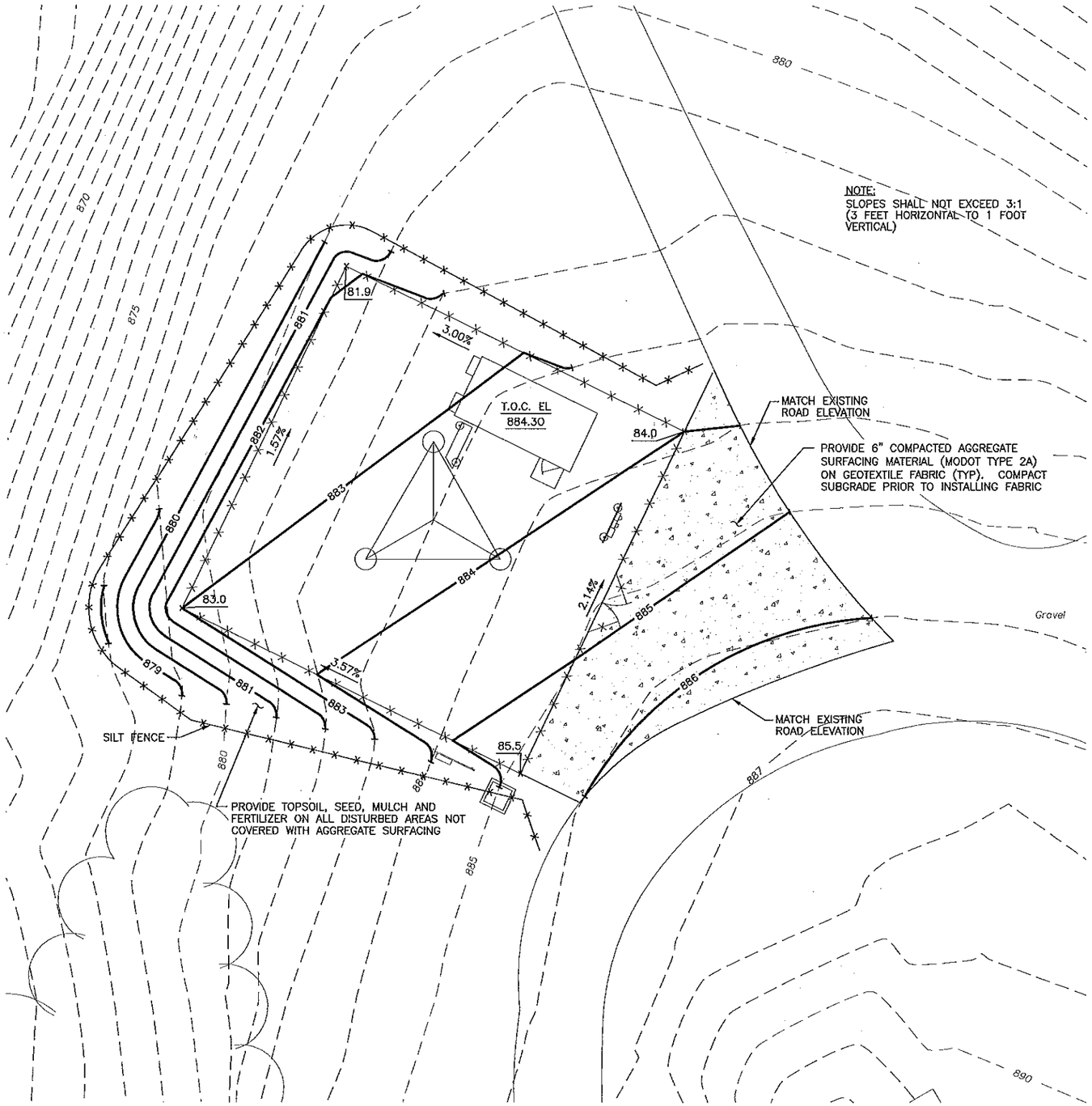

ALL CIVIL WORK TO BE COMPLETED BY CLAY COUNTY HIGHWAY DEPARTMENT

GRADING NOTES:

1. STRIP THE GROUND OF ALL VEGETATION AND DEBRIS.
2. PROOF ROLL WITH LOADED TANDEM TO IDENTIFY SOFT SPOTS.
3. REMOVE SOFT SPOT MATERIAL AND COMPACT TO 95% AT STRUCTURE, 90% ELSEWHERE.
4. INSTALL GEOTEXTILE FABRIC ON PREPARED SUBGRADE.
5. PLACE AND COMPACT 6" AGGREGATE SURFACING.
6. SEE SPECIFICATIONS DRAWINGS FOR REQUIREMENTS OF BACKFILL MATERIAL.
7. MAINTAIN REASONABLE DUST CONTROL METHODS DURING CONSTRUCTION.
8. ENTIRE DRIVE LENGTH SHALL BE POSITIVE DRAINING DURING, AND AT COMPLETION OF CONSTRUCTION.
9. CONTRACTOR SHALL OBTAIN ANY SITE SPECIFIC SOILS REPORTS AND FOLLOW ALL RECOMMENDATIONS. A DISCREPANCY BETWEEN CONSTRUCTION DRAWINGS AND SOILS REPORT, THE GEOTECHNICAL REPORT SHALL GOVERN. SSC TO BE NOTIFIED OF DISCREPANCY.

SILTRATION NOTES:

1. SILTRATION CONTROL DEVICES TO REMAIN IN PLACE UNTIL ADEQUATE VEGETATION GROWTH INSURES NO FURTHER EROSION.
2. SILTRATION FENCES SHALL BE INSPECTED PERIODICALLY FOR DAMAGE AND FOR THE AMOUNT OF SEDIMENTATION WHICH HAS ACCUMULATED. REMOVAL OF SEDIMENT WILL BE REQUIRED WHEN IT REACHES 1/2 FENCE HEIGHT.
3. ATTACHMENT OF GEOTEXTILE FABRIC TO BE IN ACCORDANCE WITH THE MANUFACTURER'S RECOMMENDATIONS.
4. SILT FENCING TO BE USED AT ALL AREAS OF EXCAVATION.

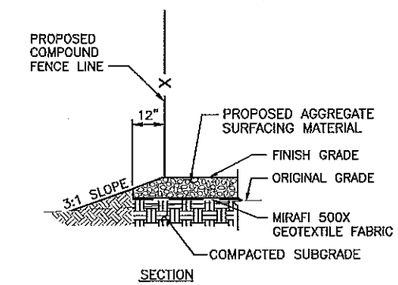

TYPICAL AGGREGATE SECTION
NO SCALE

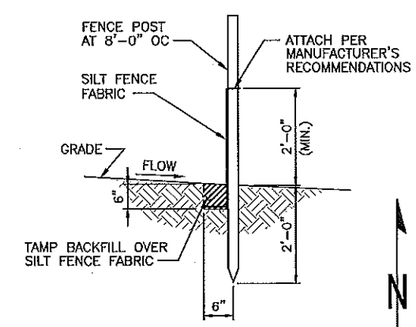

SILT FENCE DETAIL
NO SCALE

N

0' 5' 10' 20' 30'

STATE OF MISSOURI
ROBERT E. JENSEN
NUMBER
PE-028974
PROFESSIONAL ENGINEER

PLANS PREPARED FOR:

SKW
11250 Corporate Ave.
Lenexa, Kansas 66219
Phone: 913-888-7800
Fax: 913-438-7868

PLANS PREPARED BY:

SSC
9900 West 109th Street, Suite 300
Overland Park, Kansas 66210
Phone: 913-438-7700
Fax: 913-438-7777

ENGINEERING LICENSE:

STATE OF MISSOURI
PE CERTIFICATE OF AUTHORIZATION #001640

ENGINEER:		PE #:	DISCIPLINE:	
MLO	MICHAEL L. OWENS	E-20058	STRUCTURAL/CIVIL	SC
KV	KEVIN VANMAELE	E-21561	STRUCTURAL/CIVIL	SC
REJ	ROBERT E. JENSEN	E-28974	STRUCTURAL/CIVIL	SC
TMS	TERRANCE M. SUPER	E-18521	ELECTRICAL	E
SDK	SHELTON D. KEISLING	E-27323	ELECTRICAL	E
DEK	DAVE E. KASPER	E-18063	ELECTRICAL	E

DRAWING NOTICE:

THIS DRAWING HAS NOT BEEN PUBLISHED AND IS THE SOLE PROPERTY OF SSC, INC. AND IS LENT TO THE BORROWER FOR THEIR CONFIDENTIAL USE ONLY, AND IN CONSIDERATION OF THE LOAN OF THIS DRAWING, THE BORROWER PROMISES AND AGREES TO RETURN IT UPON REQUEST AND AGREES THAT IT WILL NOT BE REPRODUCED, COPIED, LENT OR OTHERWISE DISPOSED OF DIRECTLY OR INDIRECTLY, NOR USED FOR ANY PURPOSE OTHER THAN FOR WHICH IT IS FURNISHED.

SUBMITTALS

DESCRIPTION	DATE	BY	REV
ISSUED FOR REVIEW	03/19/14	JRH	A
ISSUED FOR CONSTRUCTION	06/24/14	DCP	0

SITE NAME:
CLAY COUNTY TOWER

SITE NUMBER:

SITE ADDRESS:
16530 NE 116TH ST
KEARNEY, MISSOURI
64060

SHEET DESCRIPTION:
GRADING PLAN

SSC #:

SHEET NUMBER:
C-1

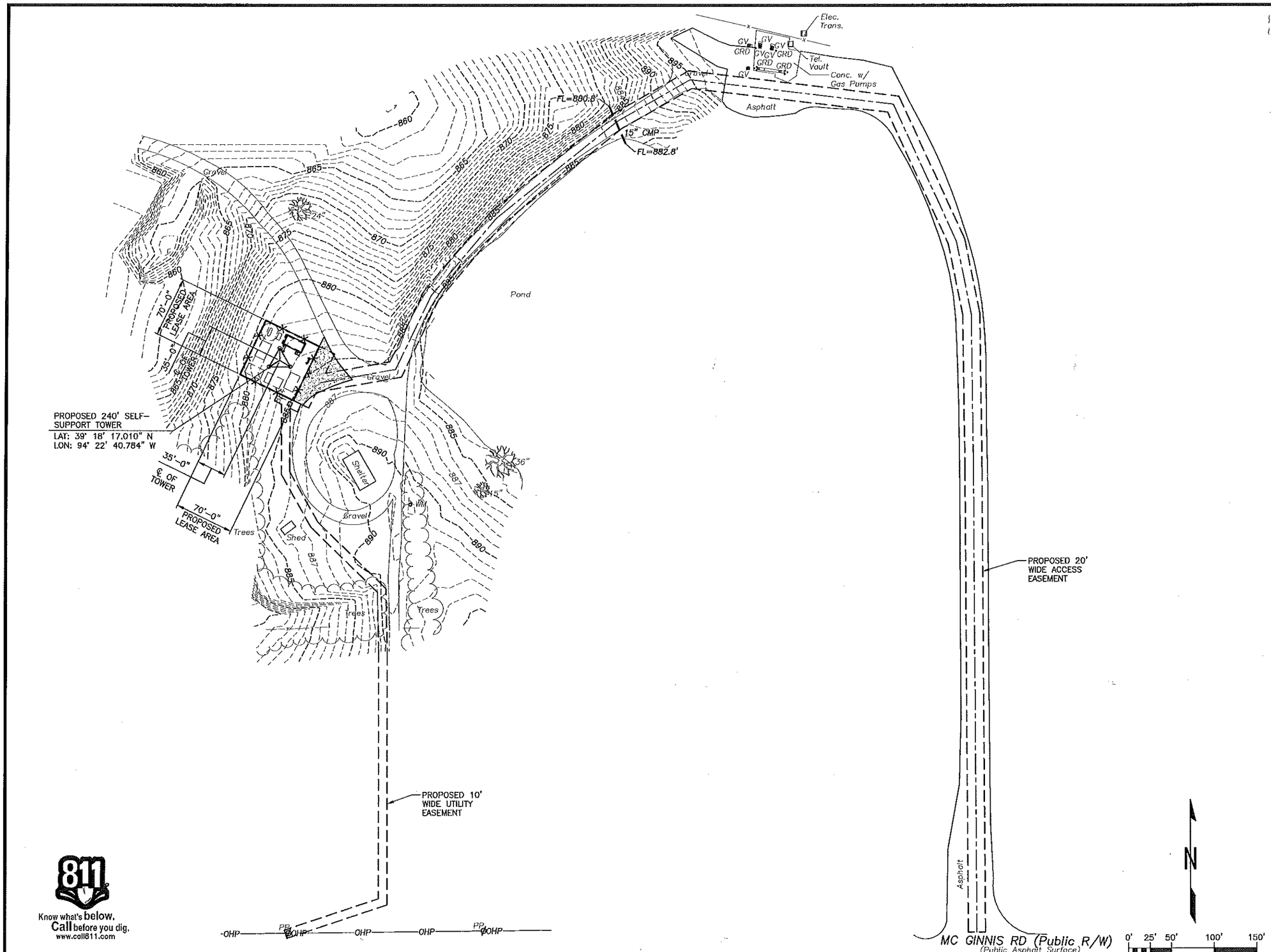

Know what's below, Call before you dig.
www.call811.com

OVERALL SITE PLAN

1

STATE OF MISSOURI
ROBERT E. JENSEN
NUMBER PE-028974
PROFESSIONAL ENGINEER
6/30/14

PLANS PREPARED FOR:

SKW
11250 Corporate Ave.
Lenexa, Kansas 66219
Phone: 913-888-7800
Fax: 913-438-7868

PLANS PREPARED BY:

SSC
9900 West 109th Street, Suite 300
Overland Park, Kansas 66210
Phone: 913-438-7700
Fax: 913-438-7777

ENGINEERING LICENSE:

STATE OF MISSOURI

PE CERTIFICATE OF AUTHORIZATION #001640

ENGINEER:		PE #:	DISCIPLINE:	
MLO	MICHAEL L. OWENS	E-29056	STRUCTURAL/CIVIL	SC
KV	KEVIN VANMAELE	E-21551	STRUCTURAL/CIVIL	SC
REJ	ROBERT E. JENSEN	E-26974	STRUCTURAL/CIVIL	SC
TMS	TERRANCE M. SUPER	E-18521	ELECTRICAL	E
SOK	SHELTON D. KEISLING	E-27323	ELECTRICAL	E
DEK	DAVE E. KASPER	E-18063	ELECTRICAL	E

DRAWING NOTICE:

THIS DRAWING HAS NOT BEEN PUBLISHED AND IS THE SOLE PROPERTY OF SSC, INC. AND IS LENT TO THE BORROWER FOR THEIR CONFIDENTIAL USE ONLY, AND IN CONSIDERATION OF THE LOAN OF THIS DRAWING, THE BORROWER PROMISES AND AGREES TO RETURN IT UPON REQUEST AND AGREES THAT IT WILL NOT BE REPRODUCED, COPIED, LENT OR OTHERWISE DISPOSED OF DIRECTLY OR INDIRECTLY, NOR USED FOR ANY PURPOSE OTHER THAN FOR WHICH IT IS FURNISHED.

SUBMITTALS

DESCRIPTION	DATE	BY	REV
ISSUED FOR REVIEW	03/19/14	JRH	A
ISSUED FOR CONSTRUCTION	06/24/14	DCP	0

SITE NAME:

CLAY COUNTY TOWER

SITE NUMBER:

SITE ADDRESS:

16530 NE 116TH ST
KEARNEY, MISSOURI
64060

SHEET DESCRIPTION:

OVERALL SITE PLAN

SSC #:

SHEET NUMBER:

A-1

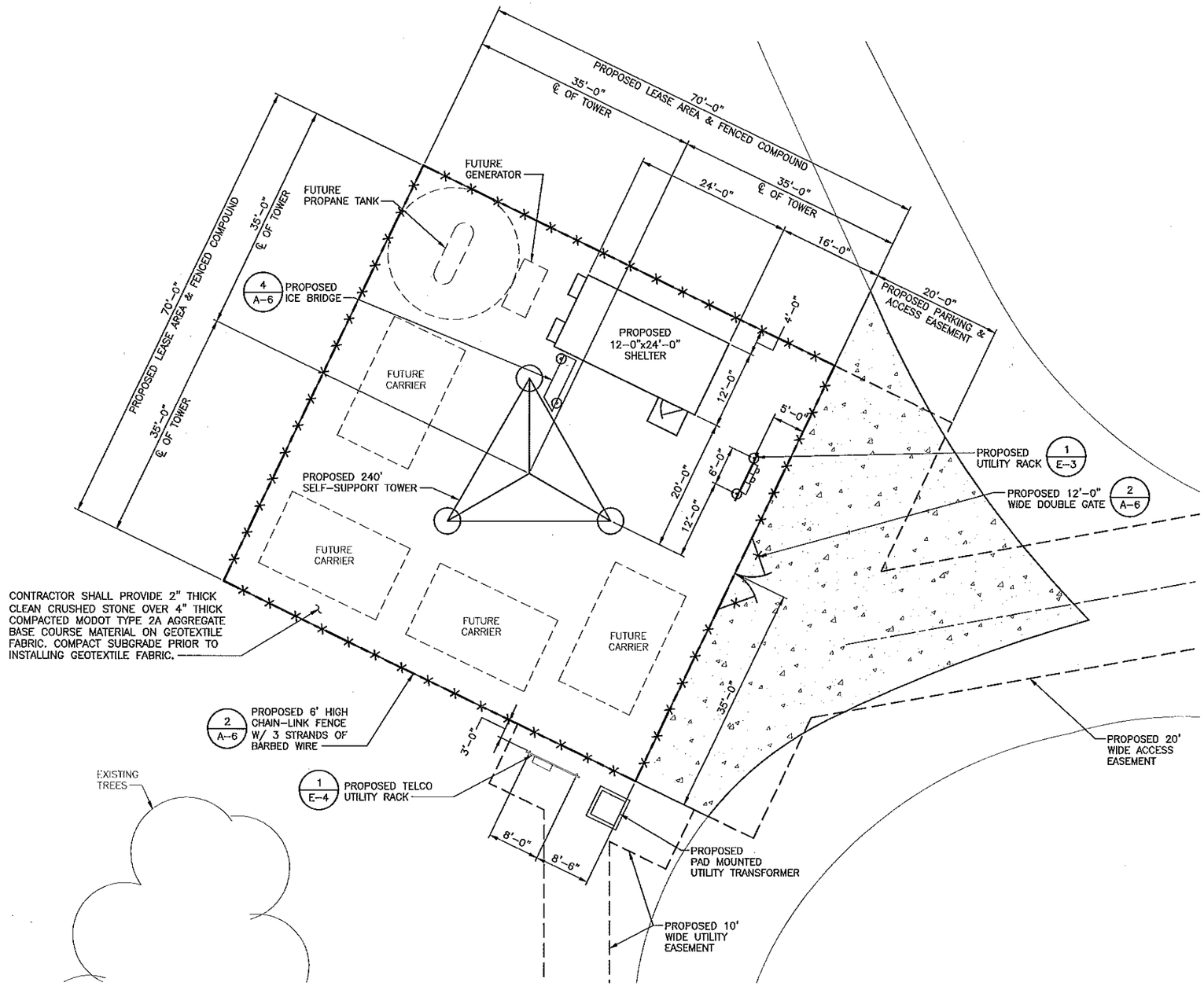

ENLARGED SITE PLAN

1

STATE OF MISSOURI
ROBERT E. JENSEN
NUMBER
PE-028974
PROFESSIONAL ENGINEER

PLANS PREPARED FOR:

SKW

11250 Corporate Ave.
Lenexa, Kansas 66219
Phone: 913-888-7800
Fax: 913-438-7868

PLANS PREPARED BY:

SSC

9900 West 109th Street, Suite 300
Overland Park, Kansas 66210
Phone: 913-438-7700
Fax: 913-438-7777

ENGINEERING LICENSE:

STATE OF MISSOURI

PE CERTIFICATE OF AUTHORIZATION #001640

ENGINEER:		PE #:	DISCIPLINE:	
MLO	MICHAEL L. OWENS	E-29058	STRUCTURAL/CIVIL	SC
KV	KEVIN VANMAELE	E-21561	STRUCTURAL/CIVIL	SC
REJ	ROBERT E. JENSEN	E-28974	STRUCTURAL/CIVIL	SC
TMS	TERRANCE M. SUPER	E-18521	ELECTRICAL	E
SDK	SHELTON D. KEISLING	E-27323	ELECTRICAL	E
DEK	DAVE E. KASPER	E-18063	ELECTRICAL	E

DRAWING NOTICE:

THIS DRAWING HAS NOT BEEN PUBLISHED AND IS THE SOLE PROPERTY OF SSC, INC. AND IS LENT TO THE BORROWER FOR THEIR CONFIDENTIAL USE ONLY, AND IN CONSIDERATION OF THE LOAN OF THIS DRAWING, THE BORROWER PROMISES AND AGREES TO RETURN IT UPON REQUEST AND AGREES THAT IT WILL NOT BE REPRODUCED, COPIED, LENT OR OTHERWISE DISPOSED OF DIRECTLY OR INDIRECTLY, NOR USED FOR ANY PURPOSE OTHER THAN FOR WHICH IT IS FURNISHED.

SUBMITTALS

DESCRIPTION	DATE	BY	REV
ISSUED FOR REVIEW	03/19/14	JRH	A
ISSUED FOR CONSTRUCTION	06/24/14	DCP	0

SITE NAME:

CLAY COUNTY TOWER

SITE NUMBER:

SITE ADDRESS:

16530 NE 116TH ST
KEARNEY, MISSOURI
64060

SHEET DESCRIPTION:

ENLARGED SITE PLAN

SSC #:

SHEET NUMBER:

A-2

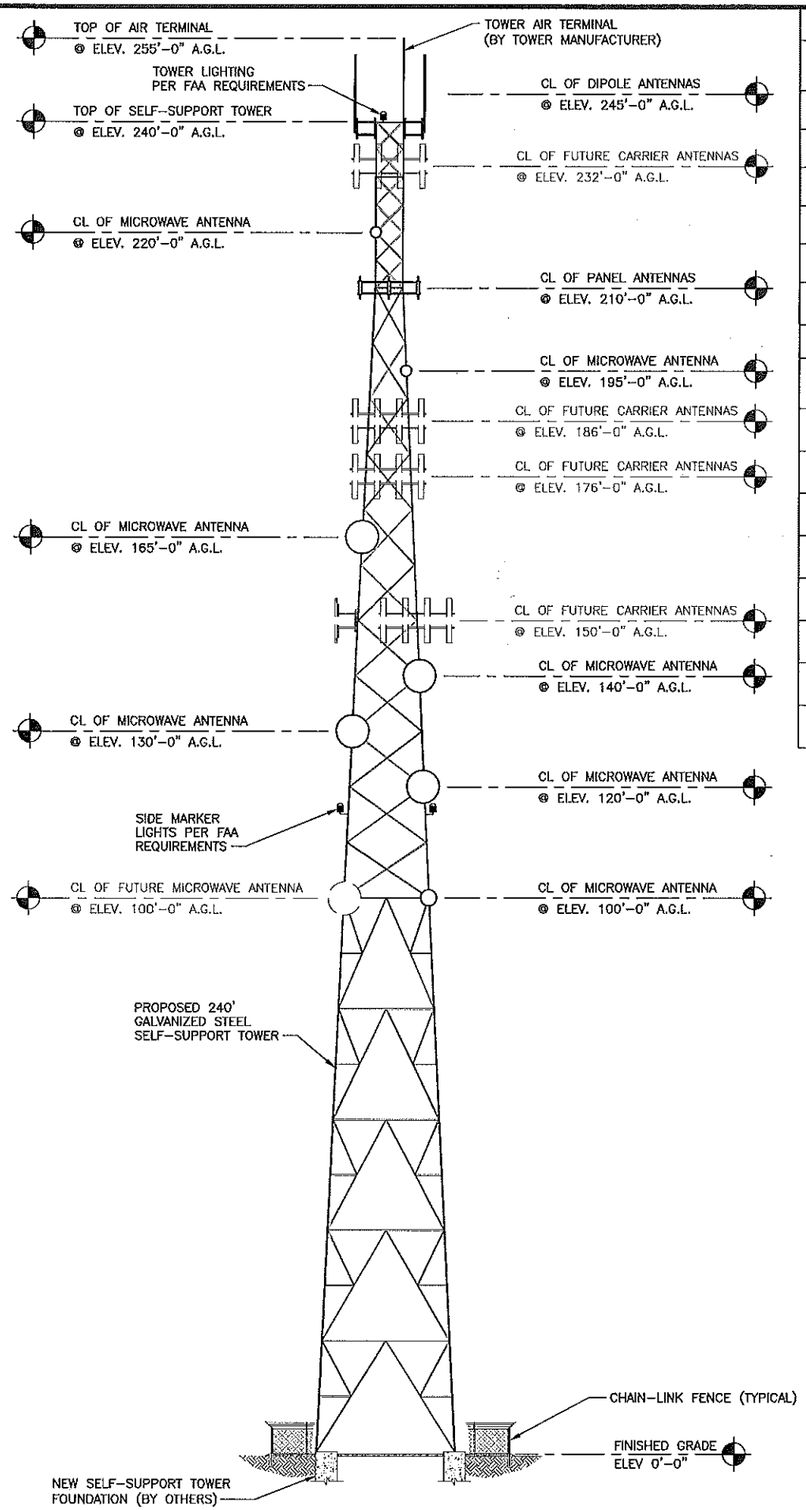

ANTENNA LOADING KEY

ANTENNA MODEL #	QTY.	ANTENNA MOUNT ELEVATION	LINE SIZE	QTY.	LINE LENGTH	AZIMUTH	FREQUENCY (mhz)	NEW OR EXISTING	MOUNT TYPE	MOUNT	PROPOSED OR FUTURE LOADING
AM-V5G-Ti	1	210'-0"	CAT5E	1	230'	0°	–	N	STAND OFF	YES	PROPOSED
AM-V5G-Ti	1	210'-0"	CAT5E	1	230'	120°	–	N	STAND OFF	YES	PROPOSED
AM-V5G-Ti	1	210'-0"	CAT5E	1	230'	240°	–	N	STAND OFF	YES	PROPOSED
BPS10-0-B1	1	245'-0"	1-1/4" & 7/8"	1	265'	0°	–	N	STAND OFF	YES	PROPOSED
BPS10-0-B1	1	245'-0"	1-5/8"	1	265'	120°	–	N	STAND OFF	YES	PROPOSED
BPS10-0-B1	1	245'-0"	1-5/8"	1	265'	240°	–	N	STAND OFF	YES	PROPOSED

MICROWAVE LOADING KEY

MICROWAVE MODEL #	QTY.	MICROWAVE ANTENNA C/L ELEVATION	LINE SIZE	QTY.	LINE LENGTH	AZIMUTH	FREQUENCY (ghz)	RADOME	DISH SIZE	DISH MOUNT	PROPOSED OR FUTURE LOADING
HPX6-59P1A/K	1	100'	EWP52	1 EA.	120'	212.26'	–	–	6'	YES	FUTURE
HPD3-18	1	100'	1/2" & CAT5E	1 EA.	120'	212.26'	–	–	3'	YES	PROPOSED
HPX6-59P1A/K	1	120'	EWP52	1	140'	120°	–	–	6'	YES	PROPOSED
HPX6-59P1A/K	1	130'	EWP52	1	150'	120°	–	–	6'	YES	PROPOSED
HPX6-59P1A/K	1	140'	EWP52	1	160'	120°	–	–	6'	YES	PROPOSED
HPD6-11	1	165'	1/2" & CAT5E	1 EA.	185'	322°	–	–	6'	YES	PROPOSED
RD-5G-30	1	195'	CAT5E	1	215'	68.97°	–	–	2'	YES	PROPOSED
RD-5G-30	1	220'	CAT5E	1	240'	25.41°	–	–	2'	YES	PROPOSED

ALL MATERIALS LISTED ABOVE TO BE FURNISHED & INSTALLED BY CONTRACTOR

NOTES:

1. ALL TOWER INFORMATION SHOWN IS FOR ILLUSTRATION PURPOSES ONLY, AND MAY DIFFER FROM THE FINAL DESIGN PROVIDED BY THE TOWER MANUFACTURER. THE CONTRACTOR SHALL CONSTRUCT THE TOWER, FOOTINGS, AND ALL OTHER RELATED COMPONENTS IN ACCORDANCE WITH THE TOWER MANUFACTURER'S DRAWINGS AND SPECIFICATIONS.
2. THE CONTRACTOR SHALL DOCUMENT THE AS-BUILT CONDITION OF THE TOWER

STATE OF MISSOURI
ROBERT E. JENSEN
NUMBER PE-028974
PROFESSIONAL ENGINEER

PLANS PREPARED FOR:

SKW
11250 Corporate Ave.
Lenexa, Kansas 66219
Phone: 913-888-7800
Fax: 913-438-7868

PLANS PREPARED BY:

SSC
9900 West 109th Street, Suite 300
Overland Park, Kansas 66210
Phone: 913-438-7700
Fax: 913-438-7777

ENGINEERING LICENSE:

STATE OF MISSOURI
PE CERTIFICATE OF AUTHORIZATION #001640

ENGINEER:		PE #:	DISCIPLINE:	
MLO	MICHAEL L. OWENS	E-29058	STRUCTURAL/CIVIL	SC
KV	KEVIN VANMAELE	E-21561	STRUCTURAL/CIVIL	SC
REJ	ROBERT E. JENSEN	E-26974	STRUCTURAL/CIVIL	SC
TMS	TERRANCE M. SUPER	E-18521	ELECTRICAL	E
SDK	SHELTON D. KEISLING	E-27323	ELECTRICAL	E
DEK	DAVE E. KASPER	E-18063	ELECTRICAL	E

DRAWING NOTICE:

THIS DRAWING HAS NOT BEEN PUBLISHED AND IS THE SOLE PROPERTY OF SSC, INC. AND IS LENT TO THE BORROWER FOR THEIR CONFIDENTIAL USE ONLY, AND IN CONSIDERATION OF THE LOAN OF THIS DRAWING, THE BORROWER PROMISES AND AGREES TO RETURN IT UPON REQUEST AND AGREES THAT IT WILL NOT BE REPRODUCED, COPIED, LENT OR OTHERWISE DISPOSED OF DIRECTLY OR INDIRECTLY, NOR USED FOR ANY PURPOSE OTHER THAN FOR WHICH IT IS FURNISHED.

SUBMITTALS

DESCRIPTION	DATE	BY	REV
ISSUED FOR REVIEW	03/19/14	JRH	A
ISSUED FOR CONSTRUCTION	06/24/14	DCP	0

SITE NAME:

CLAY COUNTY TOWER

SITE NUMBER:

SITE ADDRESS:

16530 NE 116TH ST
KEARNEY, MISSOURI
64060

SHEET DESCRIPTION:

TOWER ELEVATION & ANTENNA DETAILS

SSC #:

SHEET NUMBER:

A-3

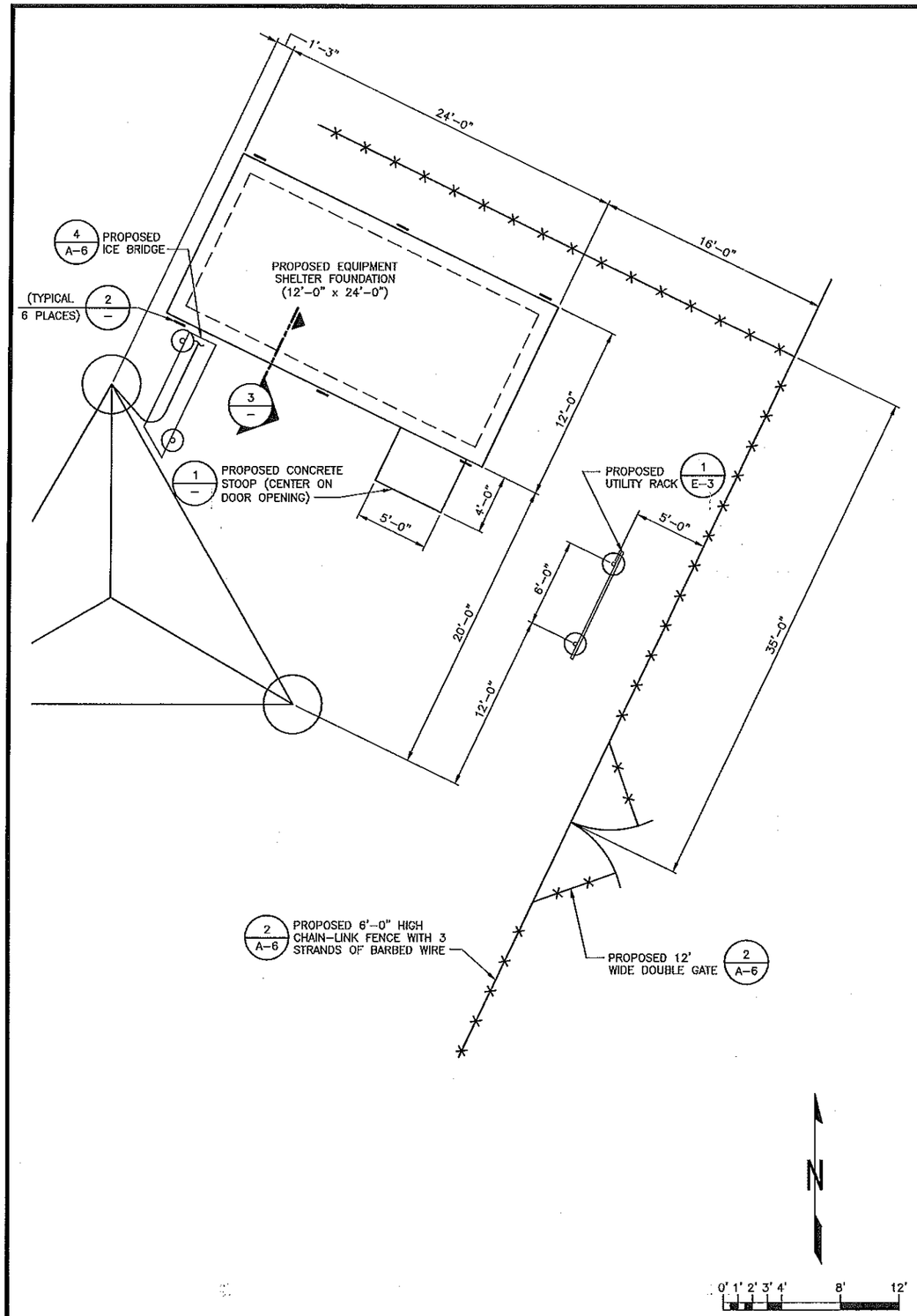

SHELTER FOUNDATION PLAN | 4

SHELTER STOOP TO BE FURNISHED & INSTALLED BY CLAY COUNTY HIGHWAY DEPARTMENT

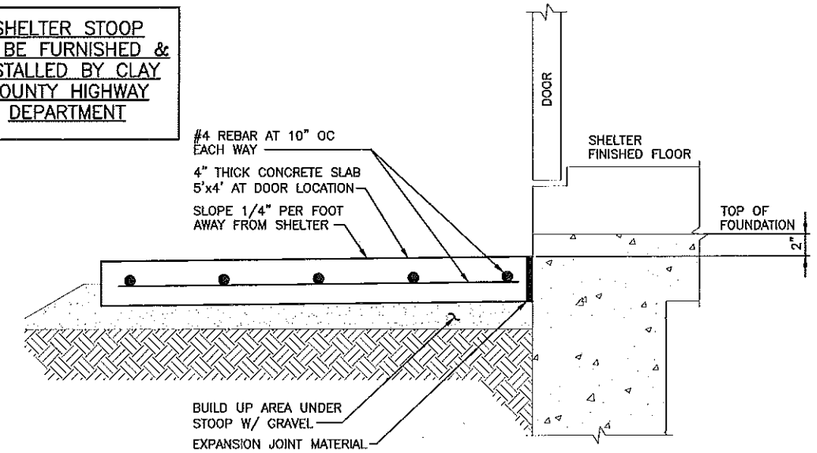

STOOP DETAIL | 1

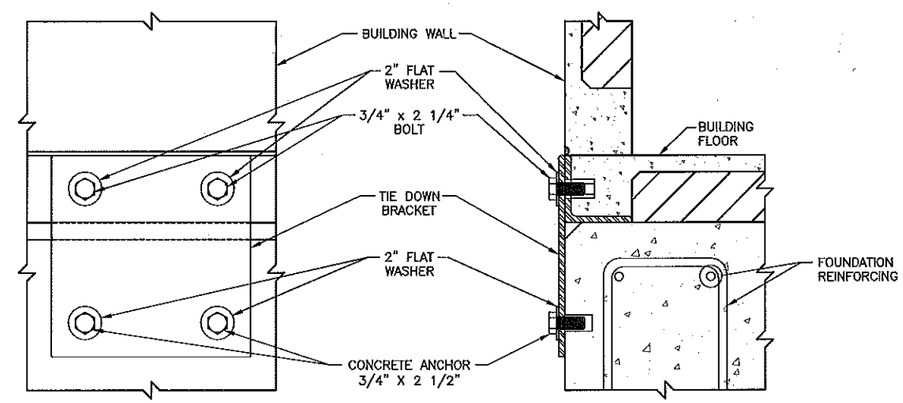

TIE DOWN BRACKET

SUPPLIED BY SHELTER MANUFACTURER
INSTALLED BY CONTRACTOR

SHELTER TIE DOWN DETAIL | 2

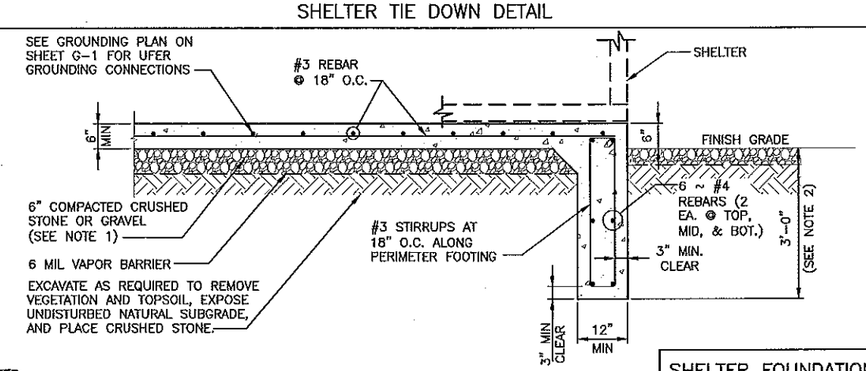

NOTES:

1. GRAVEL SHALL BE NATURAL OR CRUSHED GRAVEL WITH 100 PERCENT PASSING 1 INCH SIEVE.
2. BOTTOM OF FOUNDATION SHALL BE BELOW FROST LINE AND BEAR ON UNDISTURBED SOIL OR COMPACTED STRUCTURAL FILL.
3. REMOVE SOFT SPOT MATERIAL AND COMPACT TO 95% AT STRUCTURE AND 90% ELSEWHERE.
4. SEE SPECIFICATIONS DRAWINGS FOR REQUIREMENTS OF BACKFILL MATERIAL.

SHELTER FOUNDATION TO BE FURNISHED & INSTALLED BY CLAY COUNTY HIGHWAY DEPARTMENT

SHELTER FOUNDATION SECTION | 3

STATE OF MISSOURI
ROBERT E. JENSEN
NUMBER PE-028974
PROFESSIONAL ENGINEER

PLANS PREPARED FOR:

SKW
11250 Corporate Ave.
Lenexa, Kansas 66219
Phone: 913-888-7800
Fax: 913-438-7868

PLANS PREPARED BY:

SSC
9900 West 109th Street, Suite 300
Overland Park, Kansas 66210
Phone: 913-438-7700
Fax: 913-438-7777

ENGINEERING LICENSE:

STATE OF MISSOURI
PE CERTIFICATE OF AUTHORIZATION #001640

ENGINEER:		PE #:	DISCIPLINE:	
MLO	MICHAEL L. OWENS	E-28058	STRUCTURAL/CIVIL	SC
KV	KEVIN VANMAELE	E-21561	STRUCTURAL/CIVIL	SC
REJ	ROBERT E. JENSEN	E-28974	STRUCTURAL/CIVIL	SC
TMS	TERRANCE M. SUPER	E-18521	ELECTRICAL	E
SDK	SHELTON D. KEISLING	E-27323	ELECTRICAL	E
DEK	DAVE E. KASPER	E-18063	ELECTRICAL	E

DRAWING NOTICE:

THIS DRAWING HAS NOT BEEN PUBLISHED AND IS THE SOLE PROPERTY OF SSC, INC. AND IS LENT TO THE BORROWER FOR THEIR CONFIDENTIAL USE ONLY, AND IN CONSIDERATION OF THE LOAN OF THIS DRAWING, THE BORROWER PROMISES AND AGREES TO RETURN IT UPON REQUEST AND AGREES THAT IT WILL NOT BE REPRODUCED, COPIED, LENT OR OTHERWISE DISPOSED OF DIRECTLY OR INDIRECTLY, NOR USED FOR ANY PURPOSE OTHER THAN FOR WHICH IT IS FURNISHED.

SUBMITTALS

DESCRIPTION	DATE	BY	REV
ISSUED FOR REVIEW	03/19/14	JRH	A
ISSUED FOR CONSTRUCTION	06/24/14	DCP	0

SITE NAME:

CLAY COUNTY TOWER

SITE NUMBER:

SITE ADDRESS:

16530 NE 116TH ST
KEARNEY, MISSOURI
64060

SHEET DESCRIPTION:

SHELTER FOUNDATION PLAN & DETAILS

SSC #:

SHEET NUMBER:

A-4

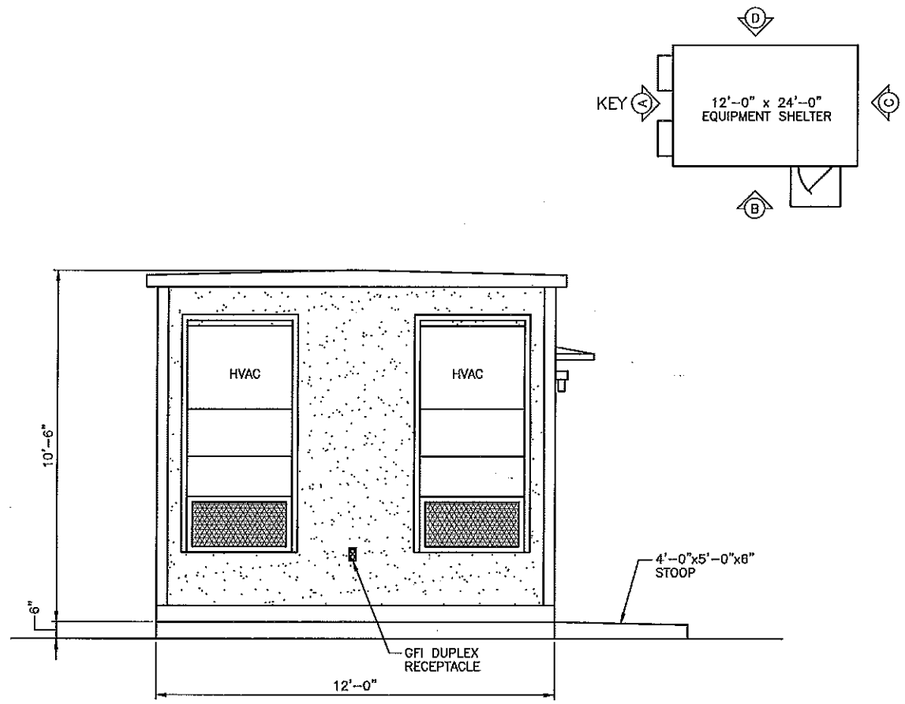

SHELTER ELEVATION "A" | 3

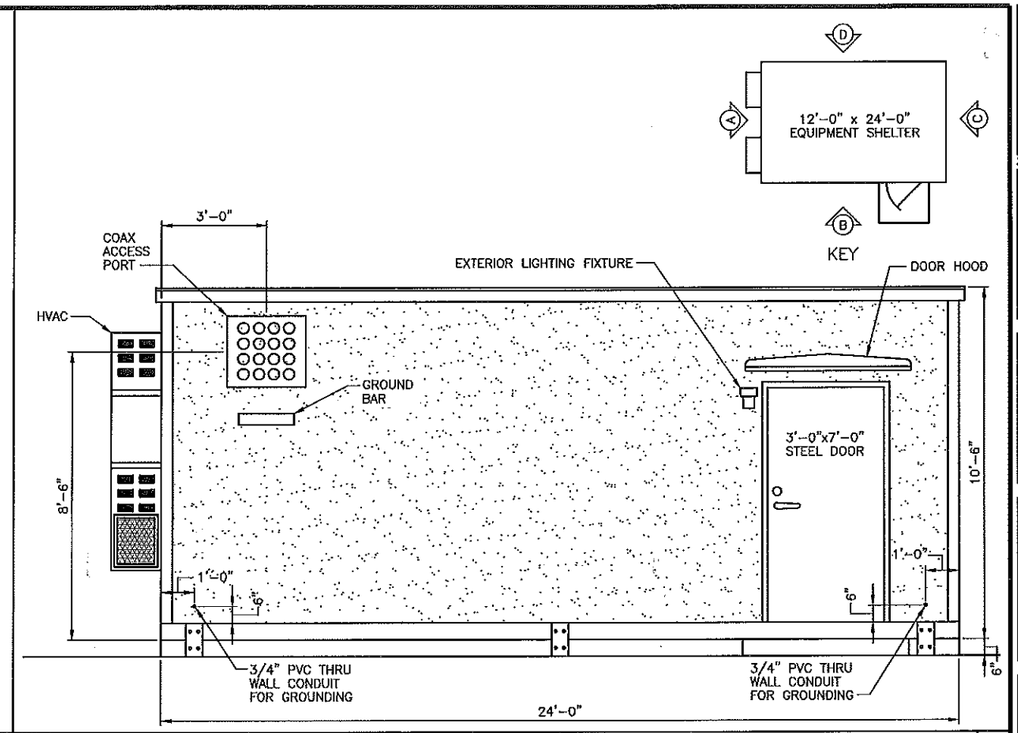

SHELTER ELEVATION "B" | 1

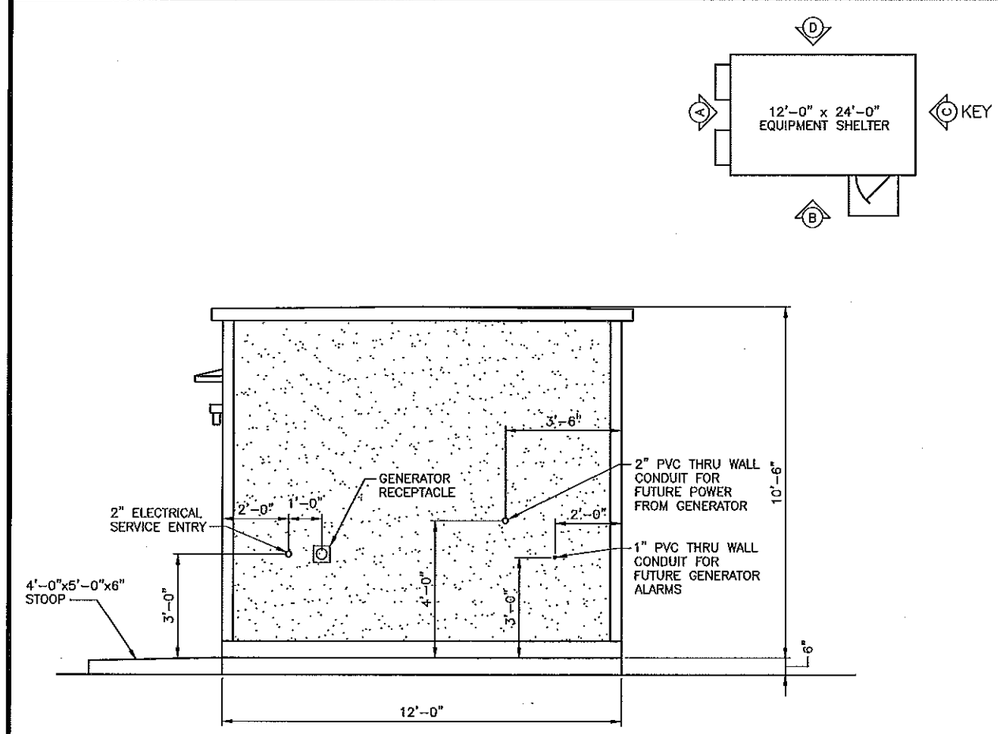

SHELTER ELEVATION "C" | 4

SHELTER
TO BE FURNISHED
BY CLAY
COUNTY HIGHWAY
DEPARTMENT
& INSTALLED
BY CONTRACTOR

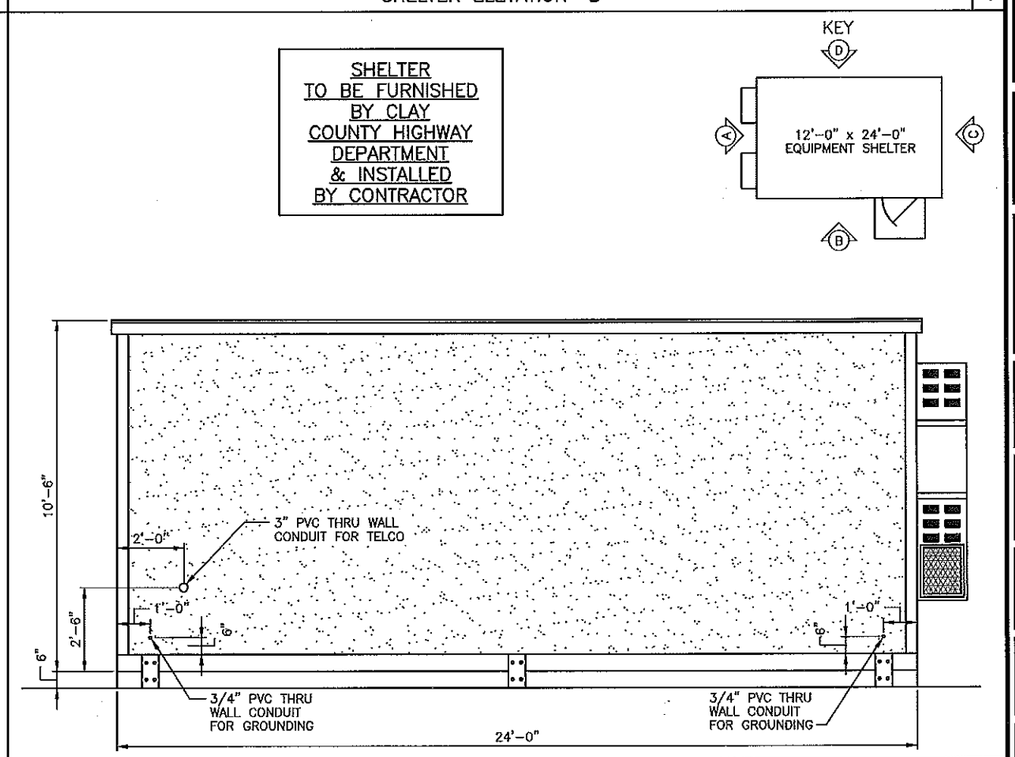

SHELTER ELEVATION "D" | 2

STATE OF MISSOURI
ROBERT E. JENSEN
NUMBER
PE-028974
PROFESSIONAL ENGINEER

PLANS PREPARED FOR:

SKW
11250 Corporate Ave.
Lenexa, Kansas 66219
Phone: 913-888-7800
Fax: 913-438-7868

PLANS PREPARED BY:

SSC
9900 West 109th Street, Suite 300
Overland Park, Kansas 66210
Phone: 913-438-7700
Fax: 913-438-7777

ENGINEERING LICENSE:

STATE OF MISSOURI
PE CERTIFICATE OF AUTHORIZATION #001640

ENGINEER:		PE #:	DISCIPLINE:	
MLO	MICHAEL L. OWENS	E-29058	STRUCTURAL/CIVIL	SC
KV	KEVIN VANMAELE	E-21561	STRUCTURAL/CIVIL	SC
REJ	ROBERT E. JENSEN	E-28974	STRUCTURAL/CIVIL	SC
TMS	TERRANCE M. SUPER	E-18521	ELECTRICAL	E
SDK	SHELTON D. KEISLING	E-27323	ELECTRICAL	E
DEK	DAVE E. KASPER	E-16063	ELECTRICAL	E

DRAWING NOTICE:

THIS DRAWING HAS NOT BEEN PUBLISHED AND IS THE SOLE PROPERTY OF SSC, INC. AND IS LENT TO THE BORROWER FOR THEIR CONFIDENTIAL USE ONLY, AND IN CONSIDERATION OF THE LOAN OF THIS DRAWING, THE BORROWER PROMISES AND AGREES TO RETURN IT UPON REQUEST AND AGREES THAT IT WILL NOT BE REPRODUCED, COPIED, LENT OR OTHERWISE DISPOSED OF DIRECTLY OR INDIRECTLY, NOR USED FOR ANY PURPOSE OTHER THAN FOR WHICH IT IS FURNISHED.

SUBMITTALS

DESCRIPTION	DATE	BY	REV
ISSUED FOR REVIEW	03/19/14	JRH	A
ISSUED FOR CONSTRUCTION	06/24/14	DCP	0

SITE NAME:
CLAY COUNTY
TOWER

SITE NUMBER:

SITE ADDRESS:
16530 NE 116TH ST
KEARNEY, MISSOURI
64060

SHEET DESCRIPTION:
SHELTER ELEVATIONS

SSC #:

SHEET NUMBER:
A-5

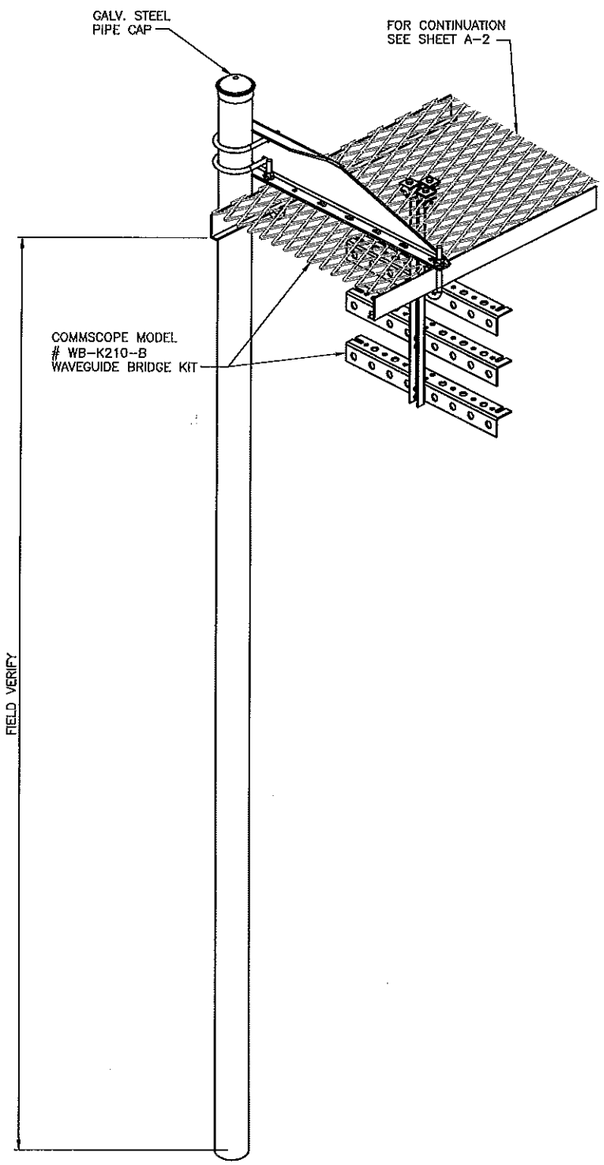

ICE BRIDGE SUPPORT POST DETAIL | 4

ICE BRIDGE & FENCE TO BE FURNISHED & INSTALLED BY CONTRACTOR

DETAIL NOT USED | 3

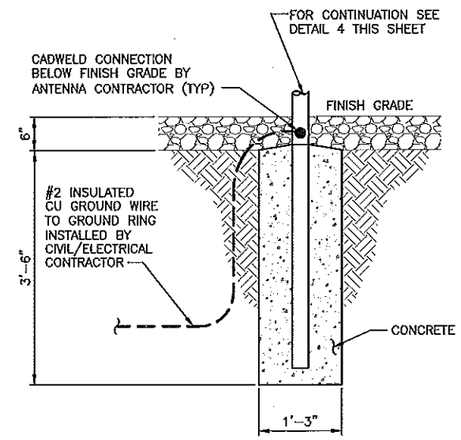

FURNISHED AND INSTALLED BY ANTENNA CONTRACTOR

ICE BRIDGE SUPPORT POST (CONCRETE PIER) | 1

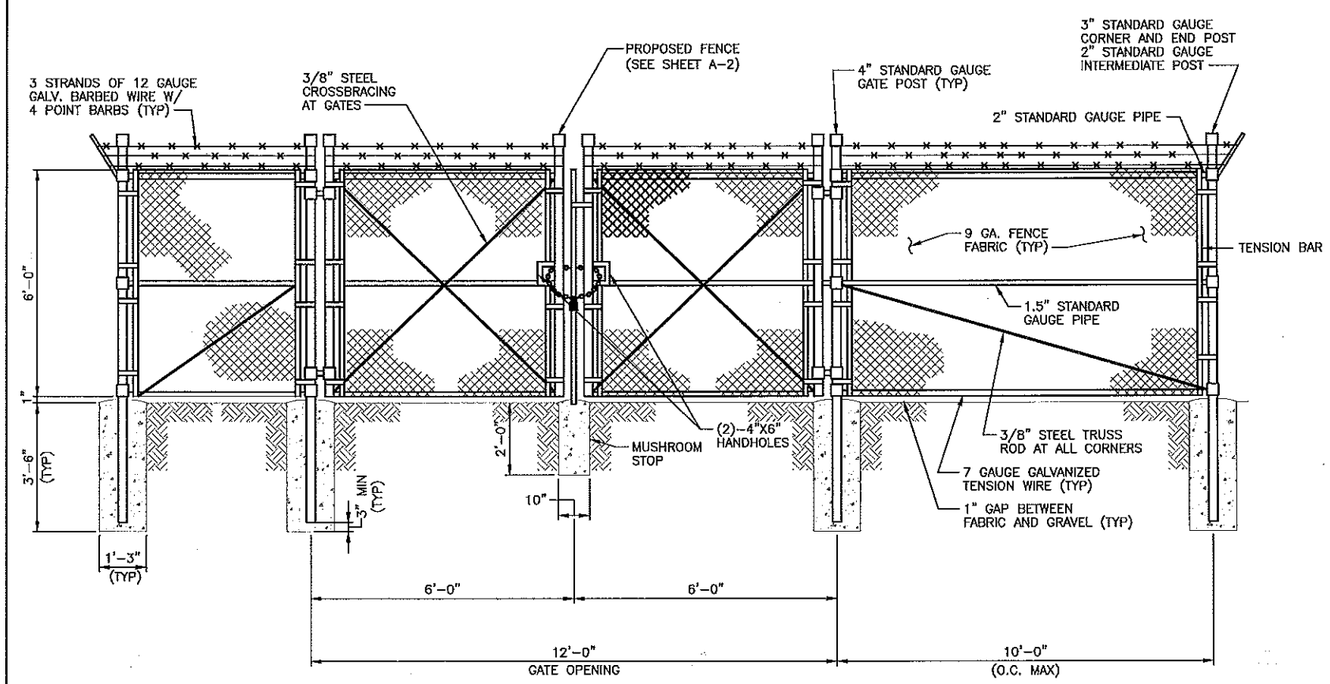

FENCE/GATE DETAIL | 2

STATE OF MISSOURI
ROBERT E. JENSEN
NUMBER
PE-028974
PROFESSIONAL ENGINEER

PLANS PREPARED FOR:

SKW
11250 Corporate Ave.
Lenexa, Kansas 66219
Phone: 913-888-7800
Fax: 913-438-7868

PLANS PREPARED BY:

SSC
9900 West 109th Street, Suite 300
Overland Park, Kansas 66210
Phone: 913-438-7700
Fax: 913-438-7777

ENGINEERING LICENSE:

STATE OF MISSOURI
PE CERTIFICATE OF AUTHORIZATION #001640

ENGINEER:		PE #:	DISCIPLINE:	
MLO	MICHAEL L. OWENS	E-29058	STRUCTURAL/CIVIL	SC
KV	KEVIN VANMAELE	E-21561	STRUCTURAL/CIVIL	SC
REJ	ROBERT E. JENSEN	E-28974	STRUCTURAL/CIVIL	SC
TMS	TERRANCE M. SUPER	E-18521	ELECTRICAL	E
SDK	SHELTON D. KEISLING	E-27323	ELECTRICAL	E
DEK	DAVE E. KASPER	E-18063	ELECTRICAL	E

DRAWING NOTICE:

THIS DRAWING HAS NOT BEEN PUBLISHED AND IS THE SOLE PROPERTY OF SSC, INC. AND IS LENT TO THE BORROWER FOR THEIR CONFIDENTIAL USE ONLY, AND IN CONSIDERATION OF THE LOAN OF THIS DRAWING, THE BORROWER PROMISES AND AGREES TO RETURN IT UPON REQUEST AND AGREES THAT IT WILL NOT BE REPRODUCED, COPIED, LENT OR OTHERWISE DISPOSED OF DIRECTLY OR INDIRECTLY, NOR USED FOR ANY PURPOSE OTHER THAN FOR WHICH IT IS FURNISHED.

SUBMITTALS

DESCRIPTION	DATE	BY	REV
ISSUED FOR REVIEW	03/19/14	JRH	A
ISSUED FOR CONSTRUCTION	06/24/14	DCP	0

SITE NAME:
CLAY COUNTY TOWER

SITE NUMBER:

SITE ADDRESS:
16530 NE 116TH ST
KEARNEY, MISSOURI
64060

SHEET DESCRIPTION:
ICE BRIDGE & FENCE DETAILS

SSC #:

SHEET NUMBER:
A-6

NOTES:

1. CONTRACTOR SHALL FURNISH AND INSTALL POWER AND TELCO PULL BOXES CONSTRUCTED, SIZED, AND LOCATED AS REQUIRED TO MEET UTILITY COMPANY REQUIREMENTS.
2. SEE E-2 FOR ENLARGED UTILITY PLAN.

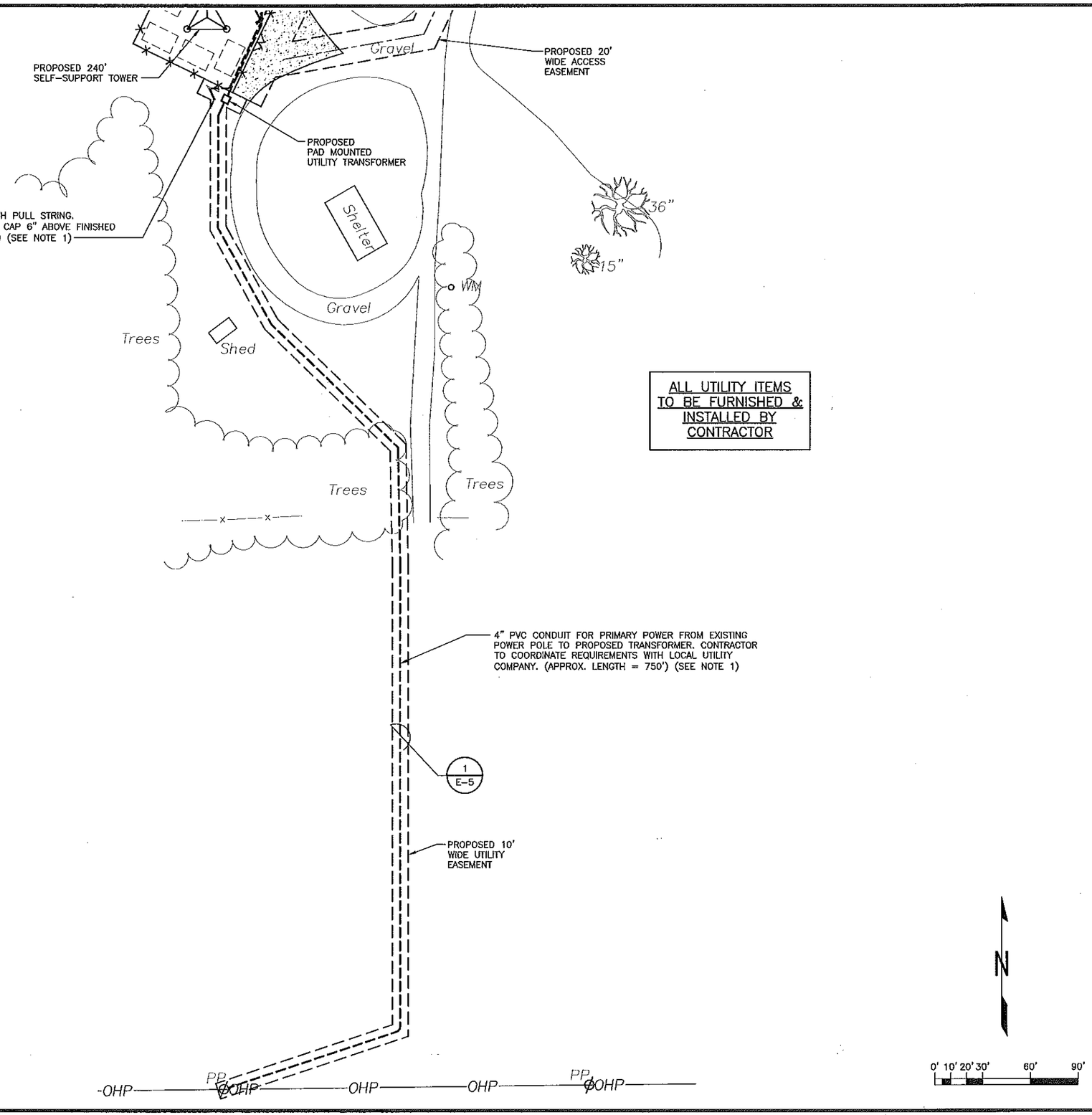

ALL UTILITY ITEMS TO BE FURNISHED & INSTALLED BY CONTRACTOR

Know what's below. Call before you dig. www.call811.com

STATE OF MISSOURI
SHELTON D. KEISLING
NUMBER E-27323
PROFESSIONAL ENGINEER

PLANS PREPARED FOR:

SKW
11250 Corporate Ave.
Lenexa, Kansas 66219
Phone: 913-888-7800
Fax: 913-438-7868

PLANS PREPARED BY:

SSC
9900 West 109th Street, Suite 300
Overland Park, Kansas 66210
Phone: 913-438-7700
Fax: 913-438-7777

ENGINEERING LICENSE:

STATE OF MISSOURI
PE CERTIFICATE OF AUTHORIZATION #001640

ENGINEER:		PE #:	DISCIPLINE:	
MLO	MICHAEL L. OWENS	E-29058	STRUCTURAL/CIVIL	SC
KV	KEVIN VANMAELE	E-21561	STRUCTURAL/CIVIL	SC
REJ	ROBERT E. JENSEN	E-28974	STRUCTURAL/CIVIL	SC
TMS	TERRANCE M. SUPER	E-18521	ELECTRICAL	E
SDK	SHELTON D. KEISLING	E-27323	ELECTRICAL	E
DEK	DAVE E. KASPER	E-18063	ELECTRICAL	E

DRAWING NOTICE:

THIS DRAWING HAS NOT BEEN PUBLISHED AND IS THE SOLE PROPERTY OF SSC, INC. AND IS LENT TO THE BORROWER FOR THEIR CONFIDENTIAL USE ONLY, AND IN CONSIDERATION OF THE LOAN OF THIS DRAWING, THE BORROWER PROMISES AND AGREES TO RETURN IT UPON REQUEST AND AGREES THAT IT WILL NOT BE REPRODUCED, COPIED, LENT OR OTHERWISE DISPOSED OF DIRECTLY OR INDIRECTLY, NOR USED FOR ANY PURPOSE OTHER THAN FOR WHICH IT IS FURNISHED.

SUBMITTALS

DESCRIPTION	DATE	BY	REV
ISSUED FOR REVIEW	03/19/14	JRB	A
ISSUED FOR CONSTRUCTION	06/24/14	DCP	0

SITE NAME:

CLAY COUNTY TOWER

SITE NUMBER:

SITE ADDRESS:

16530 NE 116TH ST
KEARNEY, MISSOURI
64060

SHEET DESCRIPTION:

OVERALL UTILITY PLAN

SSC #:

SHEET NUMBER:

E-1

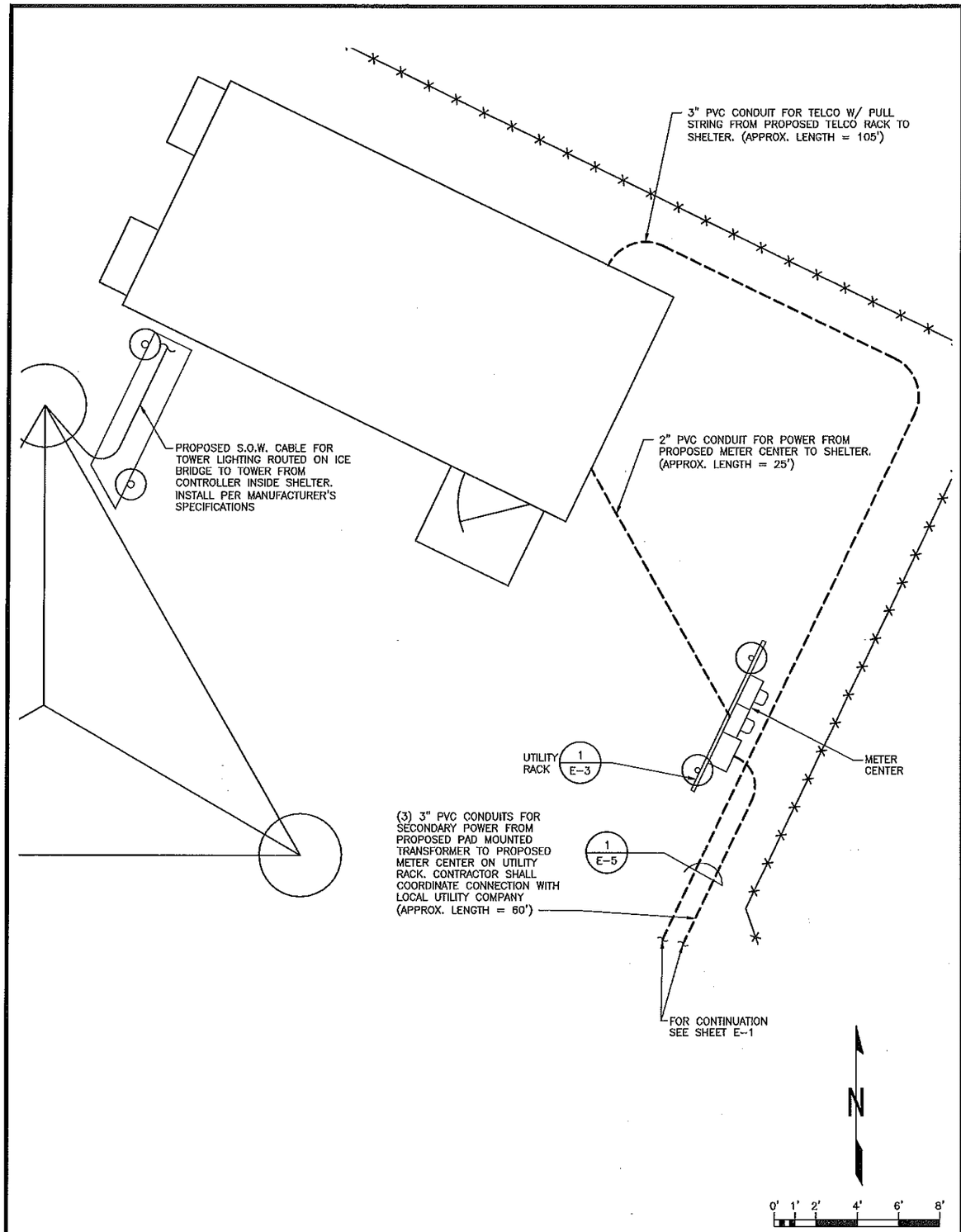

ENLARGED UTILITY PLAN | 4

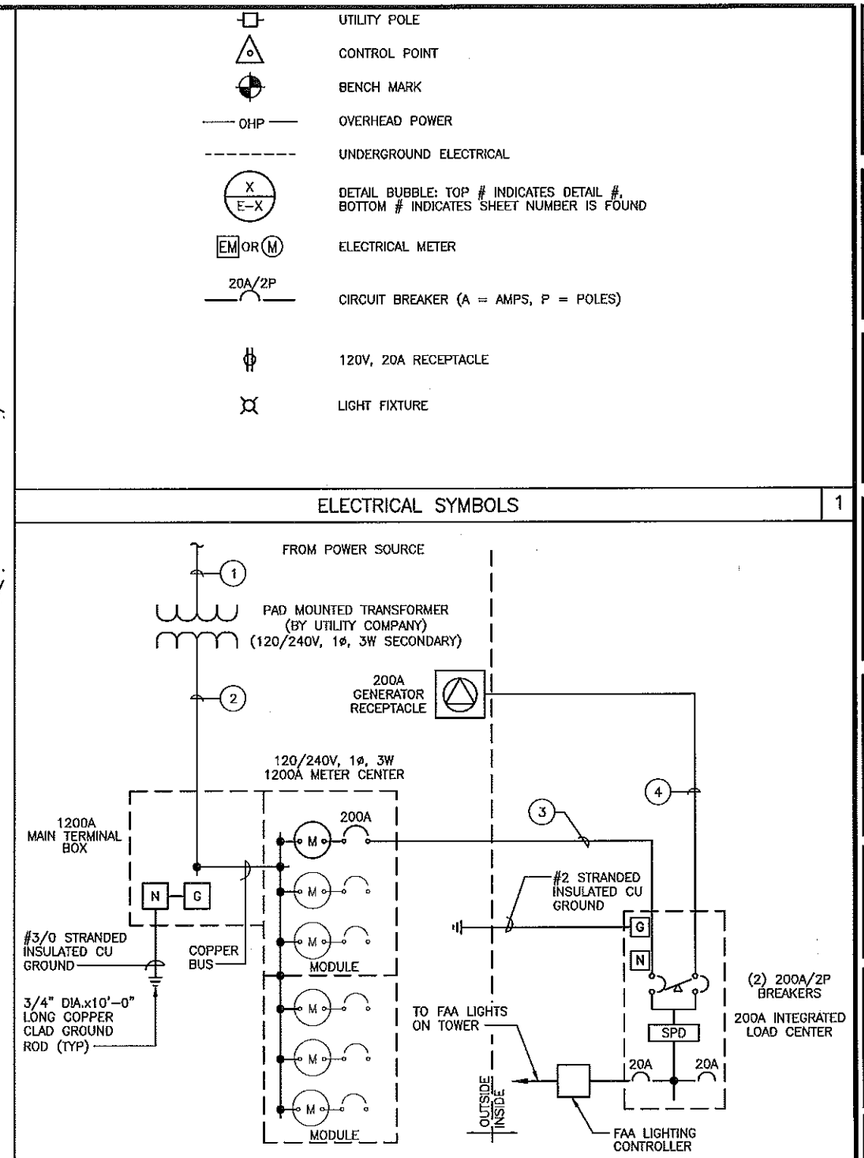

ELECTRICAL SYMBOLS | 1

ONE-LINE DIAGRAM | 2

NO.	FROM	TO	CONFIGURATION
1	SOURCE	PAD MOUNTED TRANSFORMER	4" PVC, PRIMARY CONDUCTORS BY OTHERS
2	PAD MOUNTED TRANSFORMER	METER CENTER	(3 SETS) 3 – 500KCMIL, EACH IN 3" PVC
3	METER CENTER	ILC	3#3/0, 1#6G, 2"C
4	GENERATOR RECEPTACLE	ILC	BY SHELTER MANUFACTURER

CIRCUIT SCHEDULE | 3

STATE OF MISSOURI
SHELTON KEISLING
NUMBER
E-27323
PROFESSIONAL ENGINEER

PLANS PREPARED FOR:

SKW
11250 Corporate Ave.
Lenexa, Kansas 66219
Phone: 913-888-7800
Fax: 913-438-7888

PLANS PREPARED BY:

SSC
9900 West 109th Street, Suite 300
Overland Park, Kansas 66210
Phone: 913-438-7700
Fax: 913-438-7777

ENGINEERING LICENSE:

STATE OF MISSOURI
PE CERTIFICATE OF AUTHORIZATION #001640

ENGINEER:		PE #:	DISCIPLINE:	
MLO	MICHAEL L. OWENS	E-29058	STRUCTURAL/CIVIL	SC
KV	KEVIN VANMAELE	E-21551	STRUCTURAL/CIVIL	SC
REJ	ROBERT E. JENSEN	E-28974	STRUCTURAL/CIVIL	SC
TMS	TERRANCE M. SUPER	E-18521	ELECTRICAL	E
SDK	SHELTON D. KEISLING	E-27323	ELECTRICAL	E
DEK	DAVE E. KASPER	E-18063	ELECTRICAL	E

DRAWING NOTICE:

THIS DRAWING HAS NOT BEEN PUBLISHED AND IS THE SOLE PROPERTY OF SSC, INC. AND IS LENT TO THE BORROWER FOR THEIR CONFIDENTIAL USE ONLY, AND IN CONSIDERATION OF THE LOAN OF THIS DRAWING, THE BORROWER PROMISES AND AGREES TO RETURN IT UPON REQUEST AND AGREES THAT IT WILL NOT BE REPRODUCED, COPIED, LENT OR OTHERWISE DISPOSED OF DIRECTLY OR INDIRECTLY, NOR USED FOR ANY PURPOSE OTHER THAN FOR WHICH IT IS FURNISHED.

SUBMITTALS

DESCRIPTION	DATE	BY	REV
ISSUED FOR REVIEW	03/19/14	JRH	A
ISSUED FOR CONSTRUCTION	06/24/14	DCP	0

SITE NAME:

CLAY COUNTY TOWER

SITE NUMBER:

SITE ADDRESS:

16530 NE 116TH ST
KEARNEY, MISSOURI
64060

SHEET DESCRIPTION:

ENLARGED UTILITY PLAN & ONE-LINE DIAGRAM

SSC #:

SHEET NUMBER:

E-2

GENERAL

1. UNLESS OTHERWISE NOTED, ALL UNDERGROUND CONDUIT TO BE SCH 40 PVC. 90° SWEEPING BENDS SHALL BE SCH 80.
2. UNLESS OTHERWISE NOTED, ALL ABOVE GRADE CONDUIT TO BE RGS. ALL CONNECTIONS TO BE RGS OR LIQUIDTIGHT FLEXIBLE METAL CONDUIT. VERIFY WITH CONSTRUCTION MANAGER PRIOR TO BID.
3. ALL WIRE CONNECTIONS & CONDUITS TO BE SUPPLIED BY CONTRACTOR UNLESS OTHERWISE NOTED OR SPECIFIED BY CONSTRUCTION MANAGER.
4. REFER TO DETAILS 1 & 2 SHEET E-2 FOR CIRCUIT IDENTIFICATION & ENCIRCLED NUMBERS.
5. ADDITIONAL ANGLE ADAPTERS (NOT SHOWN) ARE USED TO MOUNT SERVICE BOXES TO THE VERTICAL MEMBERS.

KEYNOTES

1. FURNISH & INSTALL A CUTLER-HAMMER MAIN TERMINAL BOX CATALOG NUMBER: 1MTB1200RC, 1200A, 120/240 V, 1ø, 3W.
2. FURNISH & INSTALL TWO (2) CUTLER-HAMMER 3 GANG, 5 JAW METER STACK MODULES, CATALOG NUMBER: 35MM320R12, 225A, 120/240 V, 1ø, 3W.

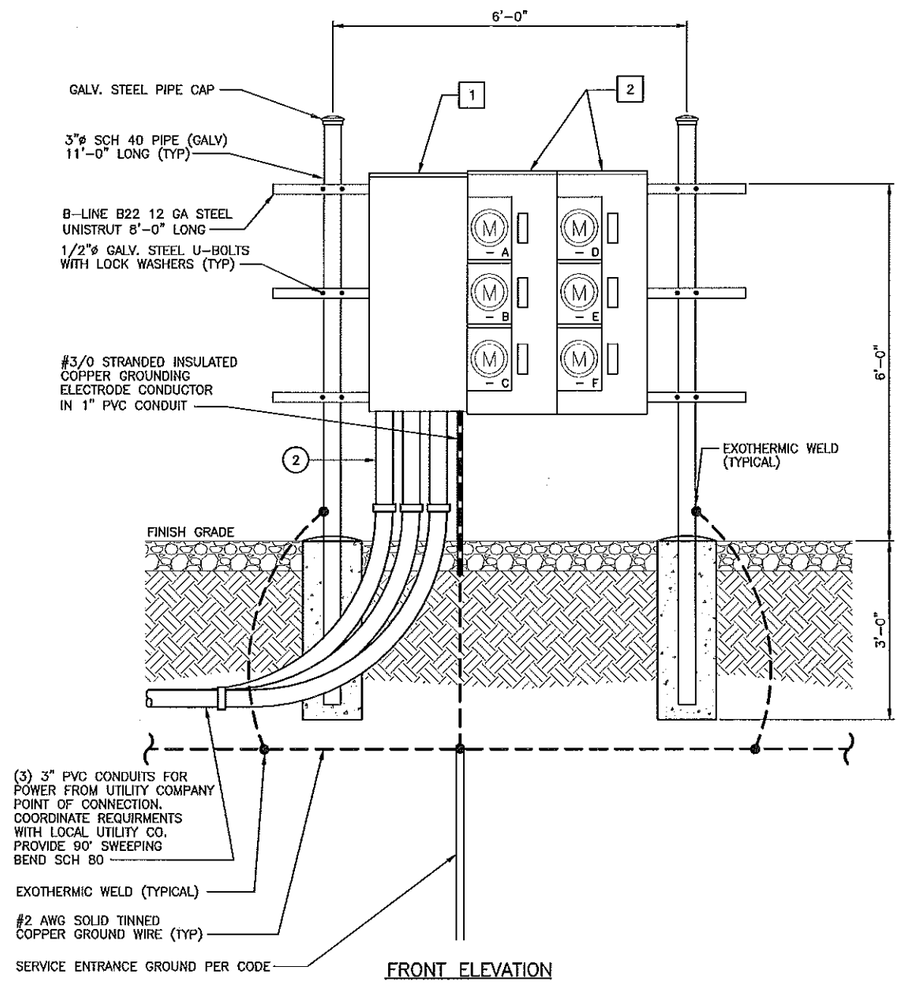

FRONT ELEVATION

UTILITY RACK ELEVATION

1

STATE OF MISSOURI
SHELTON D. KEISLING
NUMBER E-27323
6-30-14
PROFESSIONAL ENGINEER

PLANS PREPARED FOR:

SKW

11250 Corporate Ave.
Lenexa, Kansas 66219
Phone: 913-888-7800
Fax: 913-438-7868

PLANS PREPARED BY:

SSC

9900 West 109th Street, Suite 300
Overland Park, Kansas 66210
Phone: 913-438-7700
Fax: 913-438-7777

ENGINEERING LICENSE:

STATE OF MISSOURI

PE CERTIFICATE OF AUTHORIZATION #001640

ENGINEER:		PE #:	DISCIPLINE:	
MLO	MICHAEL L. OWENS	E-29058	STRUCTURAL/CIVIL	SC
KV	KEVIN VANMAELE	E-21561	STRUCTURAL/CIVIL	SC
REJ	ROBERT E. JENSEN	E-28974	STRUCTURAL/CIVIL	SC
TMS	TERRANCE M. SUPER	E-16521	ELECTRICAL	E
SDK	SHELTON D. KEISLING	E-27323	ELECTRICAL	E
DEK	DAVE E. KASPER	E-18063	ELECTRICAL	E

DRAWING NOTICE:

THIS DRAWING HAS NOT BEEN PUBLISHED AND IS THE SOLE PROPERTY OF SSC, INC. AND IS LENT TO THE BORROWER FOR THEIR CONFIDENTIAL USE ONLY, AND IN CONSIDERATION OF THE LOAN OF THIS DRAWING,THE BORROWER PROMISES AND AGREES TO RETURN IT UPON REQUEST AND AGREES THAT IT WILL NOT BE REPRODUCED, COPIED, LENT OR OTHERWISE DISPOSED OF DIRECTLY OR INDIRECTLY, NOR USED FOR ANY PURPOSE OTHER THAN FOR WHICH IT IS FURNISHED.

SUBMITTALS

DESCRIPTION	DATE	BY	REV
ISSUED FOR REVIEW	03/19/14	JRH	A
ISSUED FOR CONSTRUCTION	06/24/14	DCP	0

SITE NAME:

CLAY COUNTY TOWER

SITE NUMBER:

SITE ADDRESS:

16530 NE 116TH ST
KEARNEY, MISSOURI
64060

SHEET DESCRIPTION:

UTILITY RACK ELEVATION

SSC #:

SHEET NUMBER:

E-3

GENERAL

1. ALL WIRE CONNECTIONS & CONDUITS TO BE SUPPLIED BY CONTRACTOR UNLESS OTHERWISE NOTED OR SPECIFIED BY CONSTRUCTION MANAGER.

2. ADDITIONAL ANGLE ADAPTERS (NOT SHOWN) ARE USED TO MOUNT SERVICE BOXES TO THE VERTICAL MEMBERS.

3. SPRAY ALL CADWELD CONNECTIONS WITH Z.R.C. (ZINC RICH PAINT).

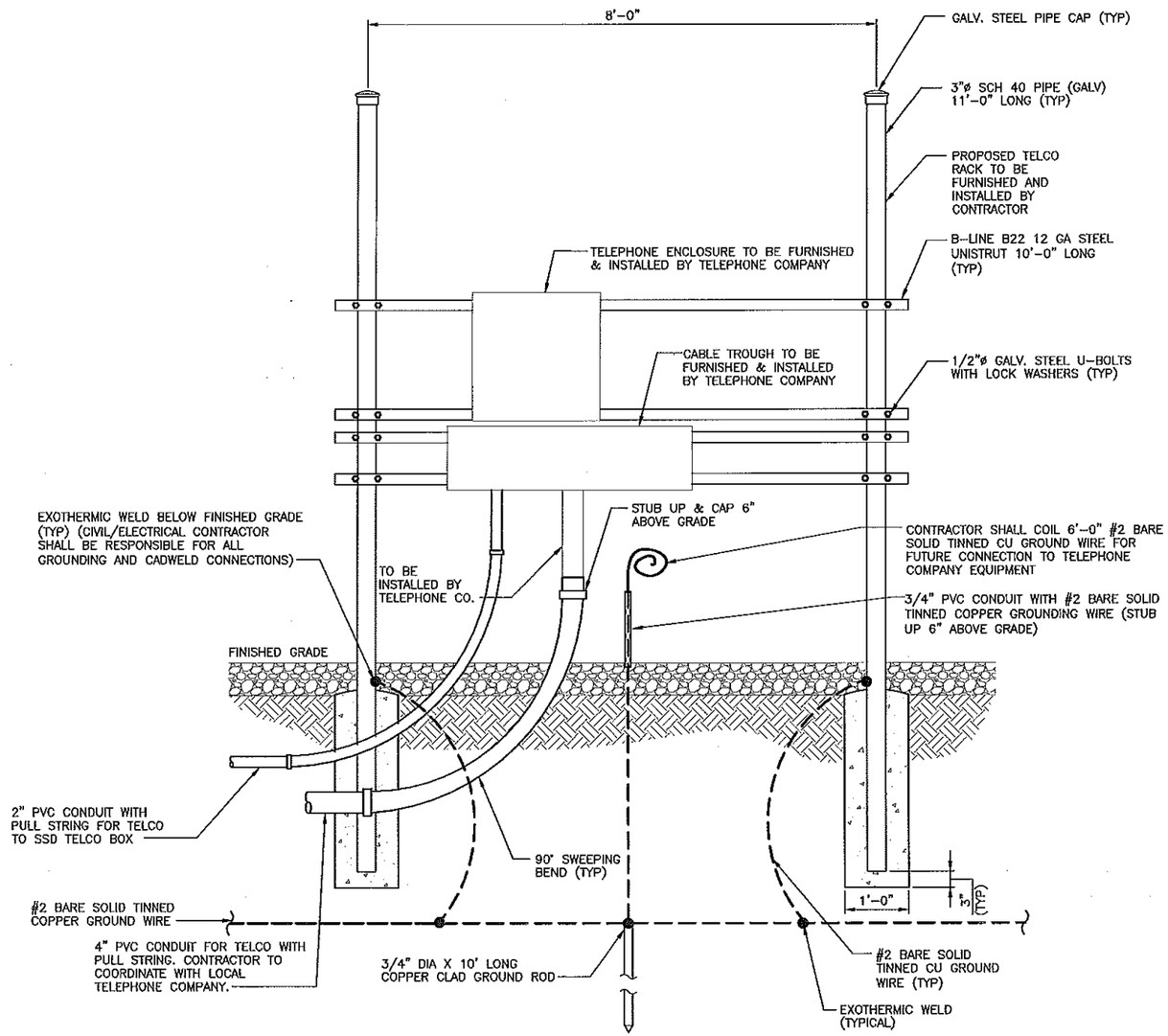

TELCO RACK ELEVATION

1

STATE OF MISSOURI
SHELTON KEISLING
NUMBER
E-27323
PROFESSIONAL ENGINEER

PLANS PREPARED FOR:

SKW
11250 Corporate Ave.
Lenexa, Kansas 66219
Phone: 913-888-7800
Fax: 913-438-7868

PLANS PREPARED BY:

SSC
9900 West 109th Street, Suite 300
Overland Park, Kansas 66210
Phone: 913-438-7700
Fax: 913-438-7777

ENGINEERING LICENSE:

STATE OF MISSOURI

PE CERTIFICATE OF AUTHORIZATION #001640

ENGINEER:		PE #:	DISCIPLINE:	
MLO	MICHAEL L. OWENS	E-29059	STRUCTURAL/CIVIL	SC
KV	KEVIN VANMAELE	E-21551	STRUCTURAL/CIVIL	SC
REJ	ROBERT E. JENSEN	E-28974	STRUCTURAL/CIVIL	SC
TMS	TERRANCE M. SUPER	E-18521	ELECTRICAL	E
SDK	SHELTON D. KEISLING	E-27323	ELECTRICAL	E
DEK	DAVE E. KASPER	E-18063	ELECTRICAL	E

DRAWING NOTICE:

THIS DRAWING HAS NOT BEEN PUBLISHED AND IS THE SOLE PROPERTY OF SSC, INC. AND IS LENT TO THE BORROWER FOR THEIR CONFIDENTIAL USE ONLY, AND IN CONSIDERATION OF THE LOAN OF THIS DRAWING, THE BORROWER PROMISES AND AGREES TO RETURN IT UPON REQUEST AND AGREES THAT IT WILL NOT BE REPRODUCED, COPIED, LENT OR OTHERWISE DISPOSED OF DIRECTLY OR INDIRECTLY, NOR USED FOR ANY PURPOSE OTHER THAN FOR WHICH IT IS FURNISHED.

SUBMITTALS

DESCRIPTION	DATE	BY	REV
ISSUED FOR REVIEW	03/19/14	JRH	A
ISSUED FOR CONSTRUCTION	06/24/14	DCP	0

SITE NAME:

CLAY COUNTY TOWER

SITE NUMBER:

SITE ADDRESS:

16530 NE 116TH ST
KEARNEY, MISSOURI
64060

SHEET DESCRIPTION:

TELCO RACK ELEVATION

SSC #:

SHEET NUMBER:

E-4

DETAIL NOT USED | 5

DETAIL NOT USED | 3

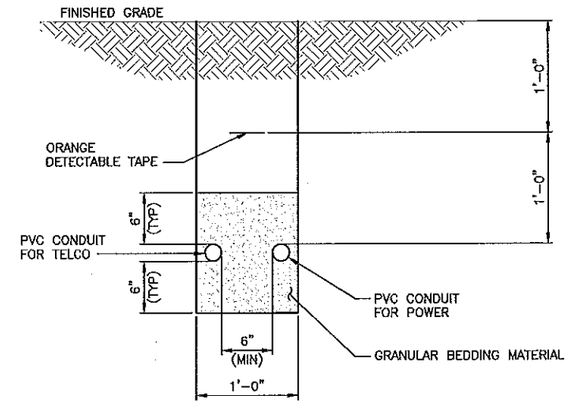

NOTE:

POWER & TELCO CONDUITS MAY BE RUN IN SEPARATE TRENCHES.
CONDUITS SHALL MAINTAIN 6 INCHES MINIMUM SEPARATION.

POWER & TELCO CONDUIT TRENCH | 1

DETAIL NOT USED | 6

DETAIL NOT USED | 4

DETAIL NOT USED | 2

STATE OF MISSOURI
SHELTON KEISLING
NUMBER
E-27323
PROFESSIONAL ENGINEER

PLANS PREPARED FOR:

SKW

11250 Corporate Ave.
Lenexa, Kansas 66219
Phone: 913-888-7800
Fax: 913-438-7868

PLANS PREPARED BY:

9900 West 109th Street, Suite 300
Overland Park, Kansas 66210
Phone: 913-438-7700
Fax: 913-438-7777

SSC

ENGINEERING LICENSE:

STATE OF: MISSOURI

PE CERTIFICATE OF AUTHORIZATION #001640

ENGINEER:		PE #:	DISCIPLINE:	
MLO	MICHAEL L. OWENS	E-29058	STRUCTURAL/CIVIL	SC
KV	KEVIN VANMAELE	E-21561	STRUCTURAL/CIVIL	SC
REJ	ROBERT E. JENSEN	E-28974	STRUCTURAL/CIVIL	SC
TMS	TERRANCE M. SUPER	E-18521	ELECTRICAL	E
SDK	SHELTON D. KEISLING	E-27323	ELECTRICAL	E
DEK	DAVE E. KASPER	E-18063	ELECTRICAL	E

DRAWING NOTICE:

THIS DRAWING HAS NOT BEEN PUBLISHED AND IS THE SOLE PROPERTY OF SSC, INC. AND IS LENT TO THE BORROWER FOR THEIR CONFIDENTIAL USE ONLY, AND IN CONSIDERATION OF THE LOAN OF THIS DRAWING, THE BORROWER PROMISES AND AGREES TO RETURN IT UPON REQUEST AND AGREES THAT IT WILL NOT BE REPRODUCED, COPIED, LENT OR OTHERWISE DISPOSED OF DIRECTLY OR INDIRECTLY, NOR USED FOR ANY PURPOSE OTHER THAN FOR WHICH IT IS FURNISHED.

SUBMITTALS

DESCRIPTION	DATE	BY	REV
ISSUED FOR REVIEW	03/19/14	JRH	A
ISSUED FOR CONSTRUCTION	06/24/14	DCP	0

SITE NAME:

CLAY COUNTY TOWER

SITE NUMBER:

SITE ADDRESS:

16530 NE 116TH ST
KEARNEY, MISSOURI
64060

SHEET DESCRIPTION:

UTILITY DETAILS

SSC #:

SHEET NUMBER:

E-5

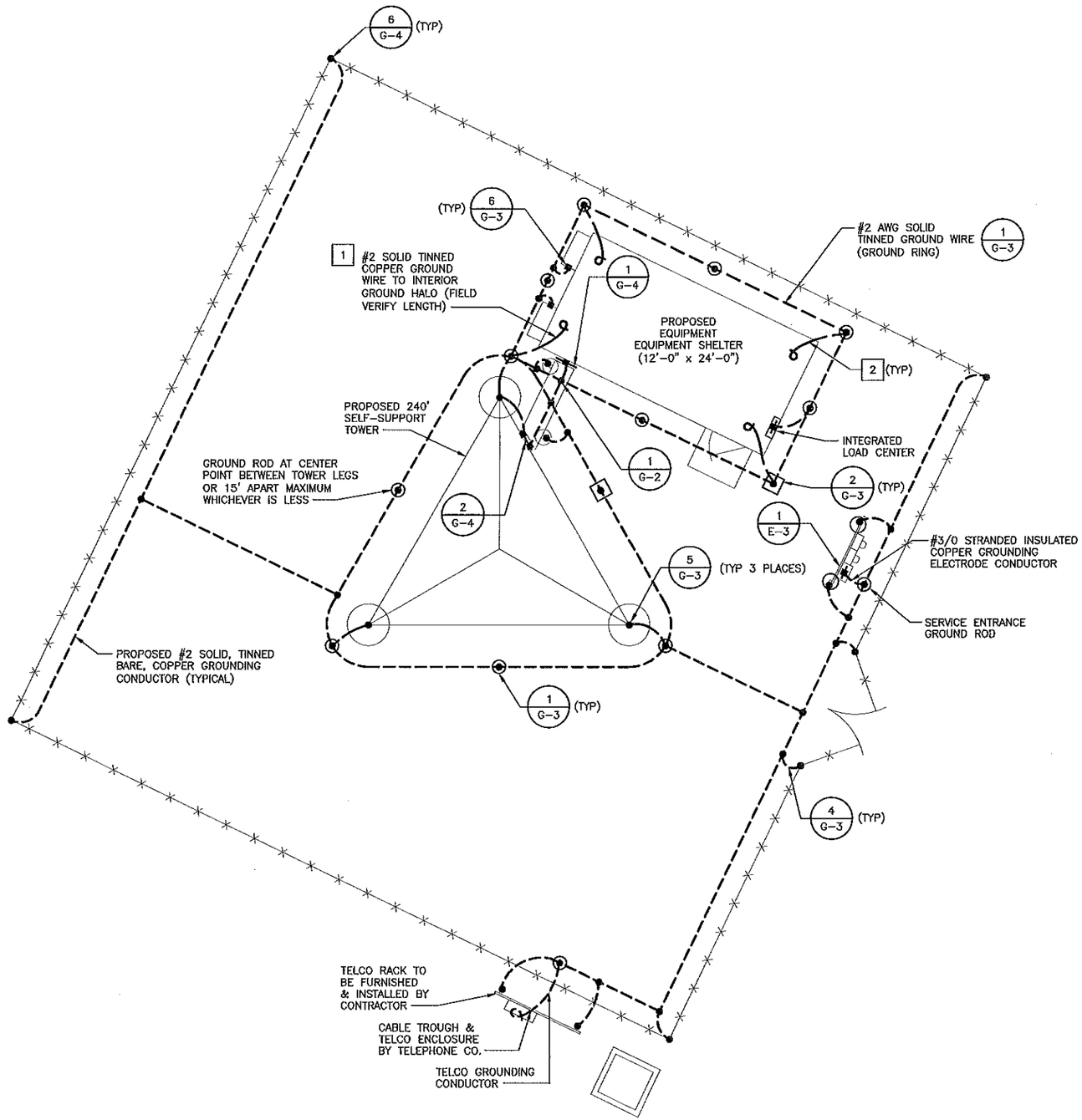

NOTES:

1. ALL GROUND LEADS ENTERING THE SHELTER GROUND RING GOING INTO THE SHELTER SHALL HAVE A 1/2" RIGID PVC SLEEVE. ATTACH PVC TO SHELTER AND/OR SHELTER FOUNDATION WITH "C" CLAMPS, CLAMPS SHELL NOT FULLY ENCIRCLE LEAD. ALL OTHERS SHALL BE 1/2" NONMETALLIC FLEXIBLE SLEEVE.
2. BOND TO SHELTER GROUND RING (TYP)

GROUNDING LEGEND

- GROUNDING CONDUCTOR ABOVE GROUND
- GROUNDING CONDUCTOR UNDER GROUND
- GND BUS / GND COND — GROUND BUS WITH COMPRESSION CONNECTION
- MECHANICAL CONNECTION
- CADWELD
- GROUND ROD
- GROUND INSPECTION / TESTWELL

GROUNDING ITEMS TO BE FURNISHED & INTSALLED BY (TBD) THIS SCOPE HAS YET TO BE DETERMINED

N

0' 1' 2' 4' 8' 12' 16'

STATE OF MISSOURI
SHELTON KEISLING
NUMBER E-27323
PROFESSIONAL ENGINEER

PLANS PREPARED FOR:

SKW
11250 Corporate Ave.
Lenexa, Kansas 66219
Phone: 913-888-7800
Fax: 913-438-7868

PLANS PREPARED BY:

SSC
9900 West 109th Street, Suite 300
Overland Park, Kansas 66210
Phone: 913-438-7700
Fax: 913-438-7777

ENGINEERING LICENSE:

STATE OF MISSOURI
PE CERTIFICATE OF AUTHORIZATION #001640

ENGINEER:		PE #:	DISCIPLINE:	
MJO	MICHAEL L. OWENS	E-29058	STRUCTURAL/CIVIL	SC
KV	KEVIN VANMAELE	E-21561	STRUCTURAL/CIVIL	SC
REJ	ROBERT E. JENSEN	E-28974	STRUCTURAL/CIVIL	SC
TMS	TERRANCE M. SUPER	E-18521	ELECTRICAL	E
SDK	SHELTON D. KEISLING	E-27323	ELECTRICAL	E
DEK	DAVE E. KASPER	E-18063	ELECTRICAL	E

DRAWING NOTICE:

THIS DRAWING HAS NOT BEEN PUBLISHED AND IS THE SOLE PROPERTY OF SSC, INC. AND IS LENT TO THE BORROWER FOR THEIR CONFIDENTIAL USE ONLY, AND IN CONSIDERATION OF THE LOAN OF THIS DRAWING, THE BORROWER PROMISES AND AGREES TO RETURN IT UPON REQUEST AND AGREES THAT IT WILL NOT BE REPRODUCED, COPIED, LENT OR OTHERWISE DISPOSED OF DIRECTLY OR INDIRECTLY, NOR USED FOR ANY PURPOSE OTHER THAN FOR WHICH IT IS FURNISHED.

SUBMITTALS

DESCRIPTION	DATE	BY	REV
ISSUED FOR REVIEW	03/19/14	JRH	A
ISSUED FOR CONSTRUCTION	06/24/14	DCP	0

SITE NAME:

CLAY COUNTY TOWER

SITE NUMBER:

SITE ADDRESS:

16530 NE 116TH ST
KEARNEY, MISSOURI
64060

SHEET DESCRIPTION:

GROUNDING PLAN

SSC #:

SHEET NUMBER:

G-1

NOTE:

GROUND LEADS ENTERING THE SHELTER SHALL HAVE 1/2" RIGID PVC SLEEVES 12" MIN BELOW FINISHED GRADE TO 6" FROM CONNECTION POINT. ALL OTHERS SHALL HAVE 1/2" NONMETALLIC FLEXIBLE CONDUIT SLEEVES MIN 12" BELOW GRADE TO 6" FROM CONNECTION POINT.

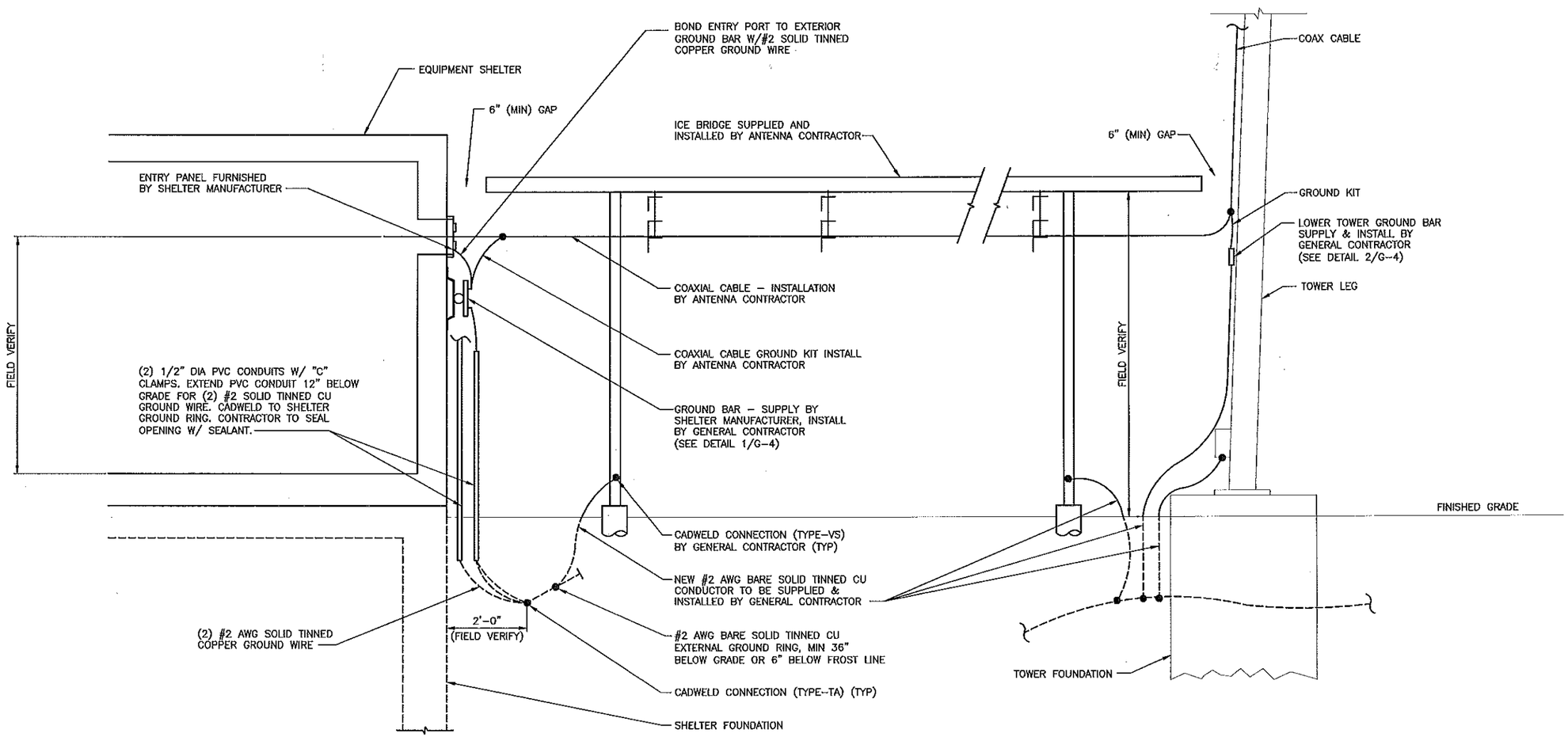

GROUNDING RISER DIAGRAM

1

STATE OF MISSOURI
SHELTON D. KEISLING
NUMBER E-27323
PROFESSIONAL ENGINEER

PLANS PREPARED FOR:

SKW
11250 Corporate Ave.
Lenexa, Kansas 66219
Phone: 913-888-7800
Fax: 913-438-7868

PLANS PREPARED BY:

SSC
9900 West 109th Street, Suite 300
Overland Park, Kansas 66210
Phone: 913-438-7700
Fax: 913-438-7777

ENGINEERING LICENSE:

STATE OF MISSOURI
PE CERTIFICATE OF AUTHORIZATION #001640

ENGINEER:		PE #:	DISCIPLINE:
MLO	MICHAEL L. OWENS	E-29058	STRUCTURAL/CIVIL SC
KV	KEVIN VANNABLE	E-21581	STRUCTURAL/CIVIL SC
REJ	ROBERT E. JENSEN	E-26974	STRUCTURAL/CIVIL SC
TMS	TERRANCE M. SUPER	E-18521	ELECTRICAL E
SDK	SHELTON D. KEISLING	E-27323	ELECTRICAL E
DEK	DAVE E. KASPER	E-18063	ELECTRICAL E

DRAWING NOTICE:

THIS DRAWING HAS NOT BEEN PUBLISHED AND IS THE SOLE PROPERTY OF SSC, INC. AND IS LENT TO THE BORROWER FOR THEIR CONFIDENTIAL USE ONLY. AND IN CONSIDERATION OF THE LOAN OF THIS DRAWING, THE BORROWER PROMISES AND AGREES TO RETURN IT UPON REQUEST AND AGREES THAT IT WILL NOT BE REPRODUCED, COPIED, LENT OR OTHERWISE DISPOSED OF DIRECTLY OR INDIRECTLY, NOR USED FOR ANY PURPOSE OTHER THAN FOR WHICH IT IS FURNISHED.

SUBMITTALS

DESCRIPTION	DATE	BY	REV
ISSUED FOR REVIEW	03/19/14	JRH	A
ISSUED FOR CONSTRUCTION	06/24/14	DCP	0

SITE NAME:

CLAY COUNTY TOWER

SITE NUMBER:

SITE ADDRESS:

16530 NE 116TH ST
KEARNEY, MISSOURI
64060

SHEET DESCRIPTION:

GROUNDING RISER DIAGRAM

SSC #:

SHEET NUMBER:

G-2

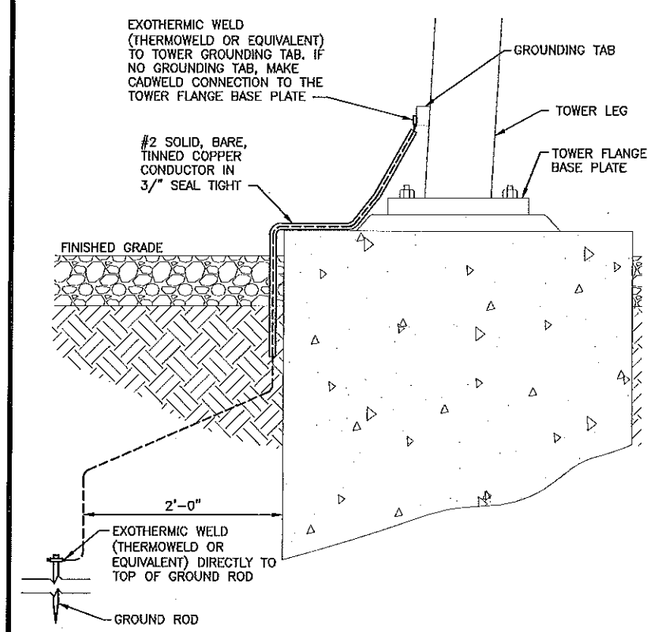

TOWER LEG GROUNDING DETAIL | 5

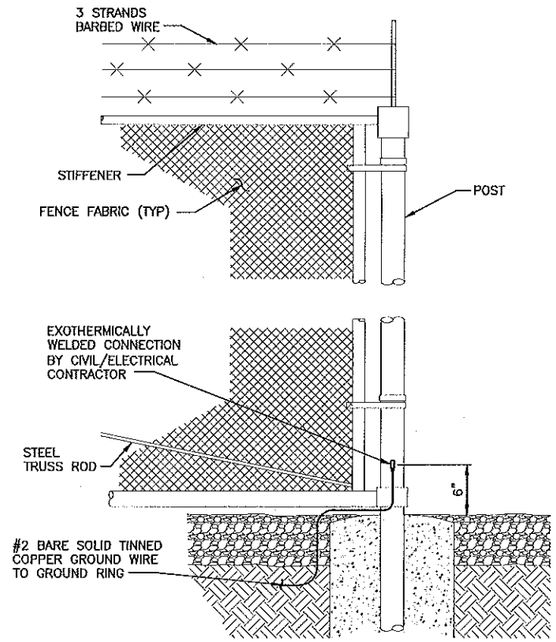

FENCE END, CORNER, AND POST GROUNDING | 3

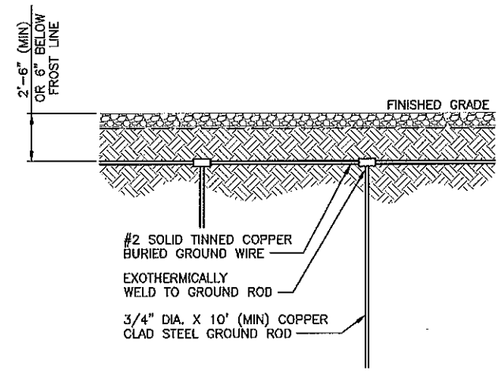

GROUND ROD DETAIL | 1

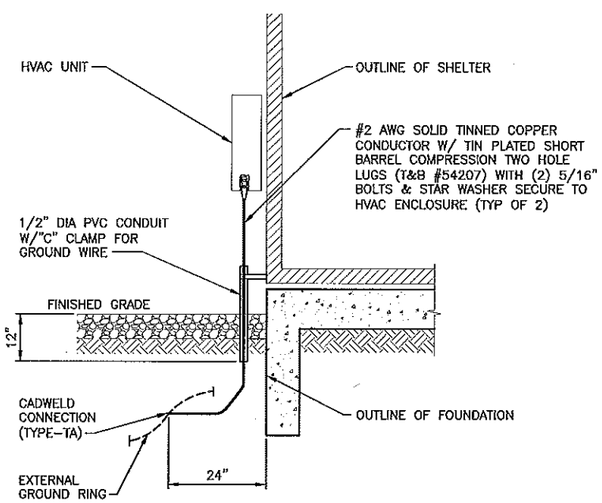

HVAC GROUNDING DETAIL | 6

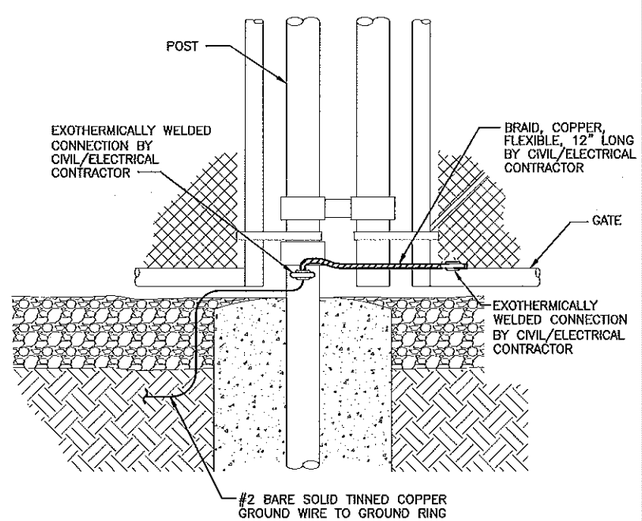

GATE AND POST GROUNDING | 4

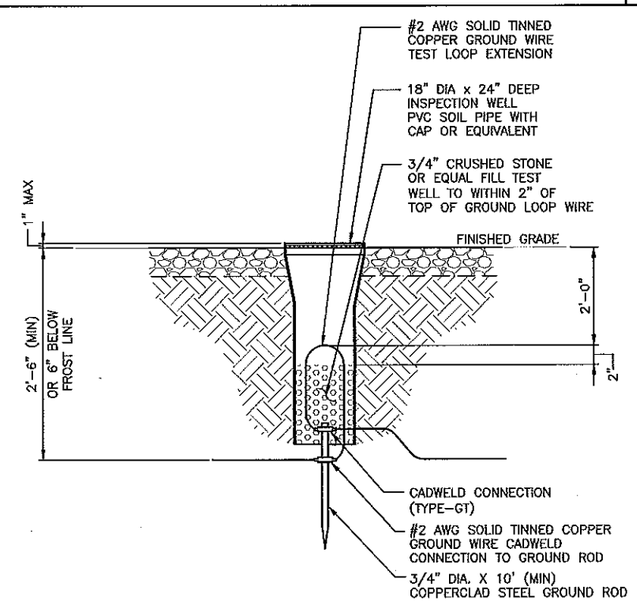

INSPECTION WELL | 2

STATE OF MISSOURI
SHELTON KEISLING
NUMBER
E-27323
PROFESSIONAL ENGINEER

PLANS PREPARED FOR:

SKW
11250 Corporate Ave.
Lenexa, Kansas 66219
Phone: 913-888-7800
Fax: 913-438-7868

PLANS PREPARED BY:

SSC
9900 West 109th Street, Suite 300
Overland Park, Kansas 66210
Phone: 913-438-7700
Fax: 913-438-7777

ENGINEERING LICENSE:

STATE OF MISSOURI

PE CERTIFICATE OF AUTHORIZATION #001640

ENGINEER:		PE #:	DISCIPLINE:	
MLO	MICHAEL L. OWENS	E-29058	STRUCTURAL/CIVIL	SC
KV	KEVIN VANMAELE	E-21581	STRUCTURAL/CIVIL	SC
REJ	ROBERT E. JENSEN	E-28974	STRUCTURAL/CIVIL	SC
TMS	TERRANCE M. SUPER	E-18521	ELECTRICAL	E
SDK	SHELTON D. KEISLING	E-27323	ELECTRICAL	E
DEK	DAVE E. KASPER	E-18063	ELECTRICAL	E

DRAWING NOTICE:

THIS DRAWING HAS NOT BEEN PUBLISHED AND IS THE SOLE PROPERTY OF SSC, INC. AND IS LENT TO THE BORROWER FOR THEIR CONFIDENTIAL USE ONLY, AND IN CONSIDERATION OF THE LOAN OF THIS DRAWING, THE BORROWER PROMISES AND AGREES TO RETURN IT UPON REQUEST AND AGREES THAT IT WILL NOT BE REPRODUCED, COPIED, LENT OR OTHERWISE DISPOSED OF DIRECTLY OR INDIRECTLY, NOR USED FOR ANY PURPOSE OTHER THAN FOR WHICH IT IS FURNISHED.

SUBMITTALS

DESCRIPTION	DATE	BY	REV
ISSUED FOR REVIEW	03/19/14	JKH	A
ISSUED FOR CONSTRUCTION	06/24/14	DCP	0

SITE NAME:

CLAY COUNTY TOWER

SITE NUMBER:

SITE ADDRESS:

16530 NE 116TH ST
KEARNEY, MISSOURI
64060

SHEET DESCRIPTION:

GROUNDING DETAILS

SSC #:

SHEET NUMBER:

G-3

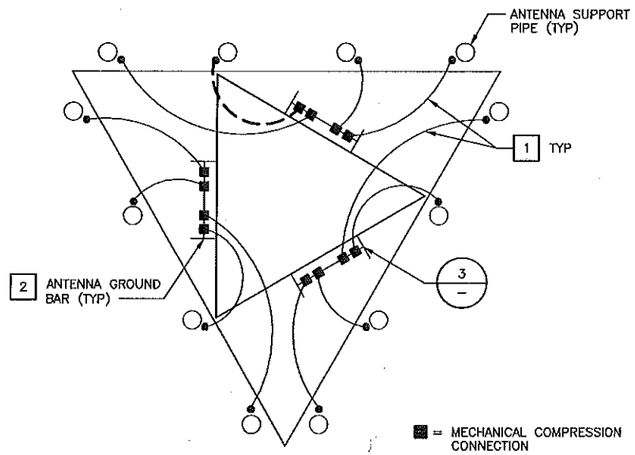

NOTES:

1. COAX GROUND KIT WIRES.
2. MOUNT TOWER GROUND BAR DIRECTLY TO TOWER WITHOUT ISOLATION BUSHINGS. CONTRACTOR TO REMOVE TOWER GALVANIZED COATING WHERE GROUND BAR COMES INTO CONTACT WITH TOWER. SUPPLY AND INSTALL COLD GALVANIZING TO TOWER AND GROUND BAR CLAMPS AFTER INSTALLATION.

ANTENNA GROUNDING PLAN | 5

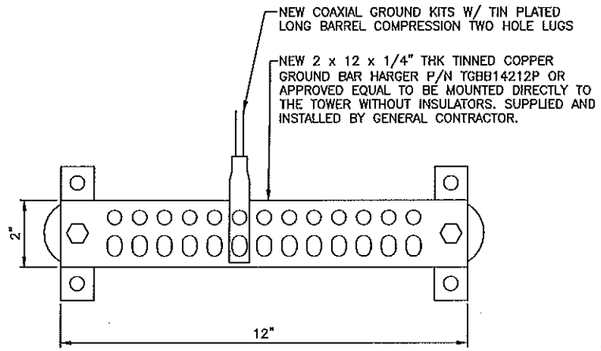

NOTES:

1. ALL HARDWARE 8-88 STAINLESS STEEL INCLUDING BELLVILLES, COAT ALL SURFACES WITH KOPR-SHIELD BEFORE MATING.
2. FOR GROUND BOND TO STEEL ONLY: INSERT A TOOTH WASHER BETWEEN LUG AND STEEL, COAT ALL SURFACES WITH KOPR-SHIELD.
3. ALL HOLES ARE COUNTERSUNK 1/16".
4. CONTRACTOR TO USE A THIN COAT OF ANTI-CORROSION GREASE AT THESE CONNECTIONS.
5. INSTALLED WITHIN 12" OF END OF COAX JUMPER CONNECTION.
6. DIMPLE OR MECHANICAL CRIMP LUGS WILL NOT BE PERMITTED.

ANTENNA GROUND BAR (ONE PER SECTOR) | 3

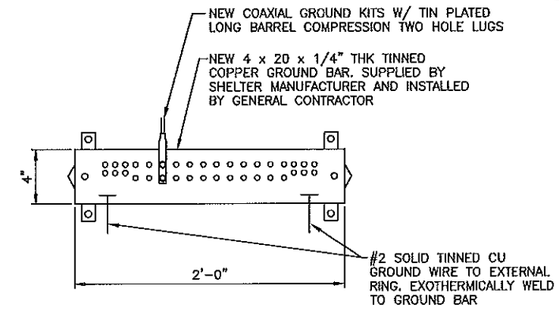

NOTES:

1. ALL HARDWARE 8-88 STAINLESS STEEL INCLUDING BELLVILLES, COAT ALL SURFACES WITH KOPR-SHIELD BEFORE MATING.
2. FOR GROUND BOND TO STEEL ONLY: INSERT A TOOTH WASHER BETWEEN LUG AND STEEL, COAT ALL SURFACES WITH KOPR-SHIELD.
3. ALL HOLES ARE COUNTERSUNK 1/16".
4. CONTRACTOR TO USE A THIN COAT OF ANTI-CORROSION GREASE AT THESE CONNECTIONS.
5. INSTALLED AT 12" BELOW THE BOTTOM OF COAX ENTRY PORT.
6. DIMPLE OR MECHANICAL CRIMP LUGS WILL NOT BE PERMITTED.

EXTERIOR SHELTER GROUND BAR | 1

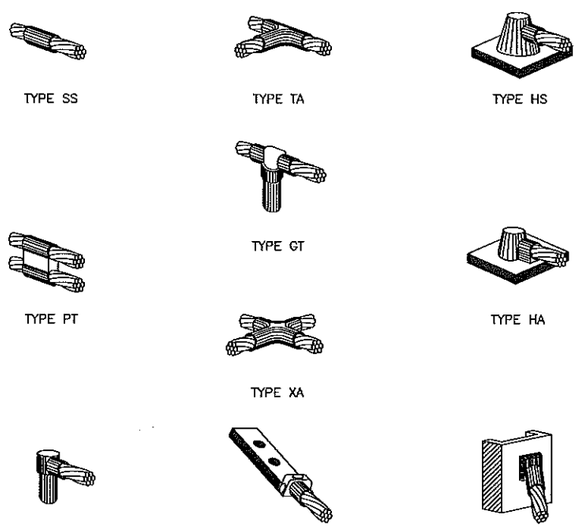

CADWELD DETAILS | 6

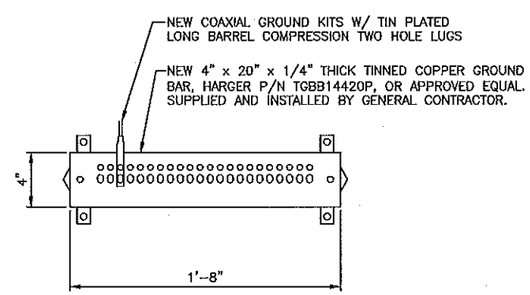

NOTES:

1. ALL HARDWARE 8-88 STAINLESS STEEL INCLUDING BELLVILLES, COAT ALL SURFACES WITH KOPR-SHEILD BEFORE MATING.
2. FOR GROUND BOND TO STEEL ONLY: INSERT A TOOTH WASHER BETWEEN LUG AND STEEL, COAT ALL SURFACES WITH KOPR-SHIELD.
3. ALL HOLES ARE COUNTERSUNK 1/16".
4. CONTRACTOR TO USE A THIN COAT OF ANTI-CORROSION GREASE AT THESE CONNECTIONS.
5. INSTALLED WITHIN 12" OF INTERMEDIATE COAX GROUND KITS. COAX GROUND KITS SHALL BE AT 75' INTERVALS STARTING FROM THE ANTENNA CENTERLINE DOWN. SELF SUPPORT AND GUYED TOWERS ONLY.
6. DIMPLE OR MECHANICAL CRIMP LUGS WILL NOT BE PERMITTED.

INTERMEDIATE COAX GROUND KIT - GROUND BAR | 4

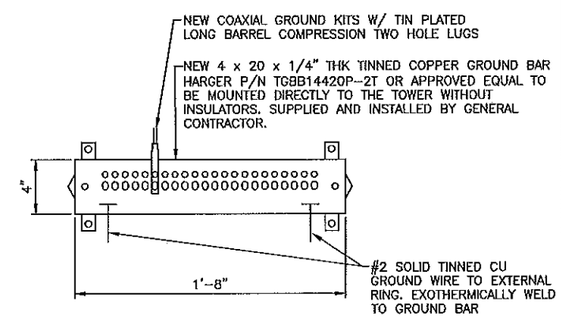

NOTES:

1. ALL HARDWARE 8-88 STAINLESS STEEL INCLUDING BELLVILLES, COAT ALL SURFACES WITH KOPR-SHIELD BEFORE MATING.
2. FOR GROUND BOND TO STEEL ONLY: INSERT A TOOTH WASHER BETWEEN LUG AND STEEL, COAT ALL SURFACES WITH KOPR-SHIELD.
3. ALL HOLES ARE COUNTERSUNK 1/16".
4. CONTRACTOR TO USE A THIN COAT OF ANTI-CORROSION GREASE AT THESE CONNECTIONS.
5. INSTALLED AT NO GREATER THAN 36" BELOW ICE BRIDGE.
6. DIMPLE OR MECHANICAL CRIMP LUGS WILL NOT BE PERMITTED.

LOWER TOWER GROUND BAR | 2

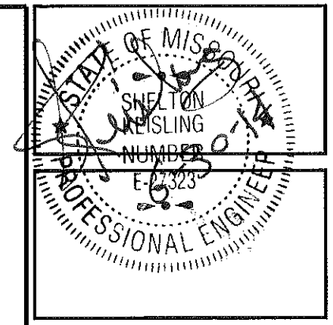

PLANS PREPARED FOR:

SKW
11250 Corporate Ave.
Lenexa, Kansas 66219
Phone: 913-888-7800
Fax: 913-438-7868

PLANS PREPARED BY:

SSC
9900 West 109th Street, Suite 300
Overland Park, Kansas 66210
Phone: 913-438-7700
Fax: 913-438-7777

ENGINEERING LICENSE:

STATE OF MISSOURI

PE CERTIFICATE OF AUTHORIZATION #001840

ENGINEER:		PE #:	DISCIPLINE:
MLO	MICHAEL L. OWENS	E-29056	STRUCTURAL/CIVIL SC
KV	KEVIN VANMAELE	E-21561	STRUCTURAL/CIVIL SC
REJ	ROBERT E. JENSEN	E-28974	STRUCTURAL/CIVIL SC
TMS	TERRANCE M. SUPER	E-18521	ELECTRICAL E
SDK	SHELTON D. KEISLING	E-27323	ELECTRICAL E
DEK	DAVE E. KASPER	E-18063	ELECTRICAL E

DRAWING NOTICE:

THIS DRAWING HAS NOT BEEN PUBLISHED AND IS THE SOLE PROPERTY OF SSC, INC. AND IS LENT TO THE BORROWER FOR THEIR CONFIDENTIAL USE ONLY, AND IN CONSIDERATION OF THE LOAN OF THIS DRAWING, THE BORROWER PROMISES AND AGREES TO RETURN IT UPON REQUEST AND AGREES THAT IT WILL NOT BE REPRODUCED, COPIED, LENT OR OTHERWISE DISPOSED OF DIRECTLY OR INDIRECTLY, NOR USED FOR ANY PURPOSE OTHER THAN FOR WHICH IT IS FURNISHED.

SUBMITTALS

DESCRIPTION	DATE	BY	REV
ISSUED FOR REVIEW	03/19/14	JRH	A
ISSUED FOR CONSTRUCTION	06/24/14	DCP	0

SITE NAME:

CLAY COUNTY TOWER

SITE NUMBER:

SITE ADDRESS:

16530 NE 116TH ST
KEARNEY, MISSOURI
64060

SHEET DESCRIPTION:

GROUNDING DETAILS

SSC #:

SHEET NUMBER:

G-4

GENERAL REQUIREMENTS SECTION 01 10 00

PART 1 GENERAL

1.1 INTENT

A. THESE SPECIFICATIONS AND CONSTRUCTION DRAWINGS DESCRIBE THE WORK TO BE DONE AND THE MATERIALS TO BE FURNISHED FOR CONSTRUCTION. PLANS ARE NOT TO BE SCALED.

B. THE DRAWINGS AND SPECIFICATIONS ARE INTENDED TO BE FULLY EXPLANATORY AND SUPPLEMENTARY, HOWEVER, SHOULD ANYTHING BE SHOWN, INDICATED OR SPECIFIED ON ONE AND NOT THE OTHER, IT SHALL BE DONE THE SAME AS IF SHOWN, INDICATED OR SPECIFIED IN BOTH.

C. THE INTENTION OF DOCUMENTS IS TO INCLUDE ALL LABOR AND MATERIALS REASONABLY NECESSARY FOR THE PROPER EXECUTION AND COMPLETION OF THE WORK AS STIPULATED IN THE CONTRACT.

D. CONFLICTS: THE CONTRACTOR SHALL BE RESPONSIBLE FOR VERIFICATION OF ALL MEASUREMENTS AT THE SITE BEFORE ORDERING MATERIALS OR DOING ANY WORK. NO COMPENSATION SHALL BE ALLOWED DUE TO DIFFERENCE BETWEEN ACTUAL DIMENSIONS AND THOSE ON THE DOCUMENTS. ANY DISCREPANCY SHALL BE REPORTED TO THE OWNER OR HIS AGENT FOR CONSIDERATION.

1.2 LICENSING REQUIREMENTS: THE CONTRACTOR IS RESPONSIBLE FOR PROCUREMENT AND MAINTAINING ALL APPLICABLE LICENSES AND BONDS.

1.3 STORAGE: ALL MATERIALS MUST BE STORED IN A LEVEL AND DRY FASHION THAT DOES NOT OBSTRUCT THE FLOW OF OTHER WORK. ANY STORAGE METHOD MUST MEET ALL RECOMMENDATIONS OF THE ASSOCIATED MANUFACTURER.

1.4 CLEAN UP: THE CONTRACTOR SHALL KEEP THE SITE FREE FROM ACCUMULATION OF WASTE MATERIALS OR RUBBISH AT ALL TIMES.

1.5 QUALITY ASSURANCE: ALL WORK SHALL BE IN ACCORDANCE WITH APPLICABLE LOCAL, STATE, AND FEDERAL REGULATIONS.

PART 2 PRODUCTS – Not Applicable To This Section

PART 3 EXECUTION – Not Applicable To This Section

END OF SECTION

CAST-IN-PLACE-CONCRETE SECTION 03 30 00

PART 1 GENERAL

1.1 SUMMARY

FURNISH AND INSTALL ALL CAST-IN-PLACE CONCRETE, REINFORCING AND ACCESSORIES, AS SPECIFIED HEREIN AND AS SHOWN ON THE DRAWINGS.

1.2 SUBMITTALS

A. PRODUCT DATA: SUBMIT MANUFACTURER'S PRODUCT DATA AND INSTALLATION INSTRUCTIONS FOR EACH MATERIAL AND PRODUCT USED.

B. SHOP DRAWINGS: SUBMIT SHOP DRAWINGS INDICATING MATERIAL CHARACTERISTICS, DETAILS OF CONSTRUCTION, CONNECTIONS, AND RELATIONSHIP WITH ADJACENT CONSTRUCTION.

SHOP DRAWINGS SHALL BE PREPARED AND STAMPED BY A QUALIFIED ENGINEER LICENSED IN THE JURISDICTION OF THE PROJECT.

C. MIX DESIGN: SUBMIT FOR APPROVAL MIX DESIGN PROPOSED FOR USE.

1.3 QUALITY ASSURANCE

A. COMPLY WITH GOVERNING CODES AND REGULATIONS. PROVIDE PRODUCTS OF ACCEPTABLE MANUFACTURERS, WHICH HAVE BEEN IN SATISFACTORY USE IN SIMILAR SERVICE FOR A MINIMUM OF THREE YEARS. USE EXPERIENCED INSTALLERS. DELIVER, HANDLE, STORE MATERIALS IN ACCORDANCE WITH MANUFACTURER'S INSTRUCTIONS.

B. TESTING: EMPLOY AN INDEPENDENT TESTING AGENCY ACCEPTABLE TO OWNER TO DESIGN CONCRETE MIXES AND TO PERFORM MATERIAL EVALUATION TESTS. PROVIDE 4 AND 28 DAY CYLINDER TESTS. COMPLY WITH ASTM C 143, C 173, C 31 AND C 39.

C. STANDARDS

1. ACI 301, SPECIFICATIONS FOR STRUCTURAL CONCRETE FOR BUILDINGS.

2. ACI 318, BUILDING CODE REQUIREMENTS FOR REINFORCED CONCRETE, AND CRSI MANUAL OF STANDARD PRACTICE.

PART 2 PRODUCTS

2.1 MATERIALS

A. MATERIALS SHALL CONFORM TO THE RESPECTIVE PUBLICATIONS AND OTHER REQUIREMENTS SPECIFIED HEREIN.

B. CEMENT: CEMENT SHALL CONFORM TO ASTM C150, TYPE 1. CEMENT MAY BE BAGGED OR BULK. CEMENT SHALL BE USED FORM ONLY ONE MILL THROUGHOUT PROJECT.

C. FINE AGGREGATE: FINE AGGREGATE SHALL CONFORM TO ASTM C33-08 AND SHALL BE UNIFORMLY GRADED, CLEAN, SHARP, WASHED MATERIAL OR CRUSHED SAND, FREE FROM ORGANIC IMPURITIES.

D. COURSE AGGREGATE: COURSE AGGREGATE SHALL CONFORM TO ASTM C33-08 AND SHALL BE NATURAL WASHED GRAVEL OR WASHED CRUSHED ROCK HAVING HARD, STRONG, DURABLE PIECES, FREE FORM ADHERENT COATINGS, THE MAXIMUM SIZE OF COARSE AGGREGATE SHALL BE 3/4" IN ACCORDANCE WITH THE REQUIREMENTS OF ASTM C33-08; GRADATION SIZE NO. 67.

E. WATER: WATER USED IN THE CONCRETE MIX SHALL BE POTABLE, CLEAN, AND FREE FROM OILS, ACIDS, SALTS, CHLORIDES, ALKALI, SUGAR, VEGETABLE, OR OTHER INJURIOUS SUBSTANCES.

F. REINFORCING STEEL: ALL BARS ARE TO BE NEW BILLET STEEL CONFORMING TO ASTM A615, GRADE 60. BENDING DETAILS RE TO CONFORM TO THE STANDARDS OF ACI 318.

G. FORMS: THE FORMS SHALL BE TRUE AND RIGID AND CONFORM TO SHAPE, LINE AND DIMENSIONS AS SHOWN ON THE DRAWINGS. ALL FORMS SHALL BE RIGIDLY CONSTRUCTED, BRACED AND TIED TO PREVENTS ANY DEFLECTION OR DISPLACEMENT DURING PLACING OF CONCRETE. ALL EXPOSED CORNERS AND EDGES SHALL HAVE 3/4" FILLETS. ALL JOINTS SHALL BE MORTAR TIGHT; OPEN JOINTS SHALL BE SEALED AS REQUIRED.

H. CONCRETE:

1. PROPORTIONING: CONCRETE SHALL CONFORM TO THE FOLLOWING:

a. CEMENT-6 SACKS PER CUBIC YARD, MINIMUM

b. WATER SHALL BE KEPT TO AN ABSOLUTE MINIMUM TO MAINTAIN SLUMP AS SPECIFIED

c. AGGREGATE; SAND FACTOR SHALL BE AS REQUIRED TO GIVE THE BEST WORKABLE MIX WITHIN THE RANGE OF 46 TO 52 PERCENT OF TOTAL AGGREGATE.

d. STRENGTH--4,000 PSI AT 28 DAYS, UNLESS NOTED OTHERWISE

e. ALL CONCRETE SHALL CONTAIN A WATER-REDUCING AGENT AND SHALL HAVE THREE (3) TO FIVE (5) PERCENT ENTRAINED AIR.

2.2 SLUMP:

A. THE MAXIMUM SLUMP SHALL NOT EXCEED 3" EXCEPT FOR CONCRETE TO BE PLACED IN FORMS 8" WIDE OR LESS, WHERE THE MAXIMUM SLUMP SHALL BE 4".

B. THE DETERMINATION OF SLUMP SHALL CONFORM TO ASTM C143.

2.3 MIXING:

THE CONTRACTOR SHALL USE READY--MIXED CONCRETE, MIXED AND DELIVERED IN CONFORMANCE WITH ASTM C94.

2.4 MIXTURES:

A. THE CONCRETE SHALL CONTAIN AND AIR-ENTRAINING ADMIXTURE COMPLYING WITH THE REQUIREMENTS OF ASTM C-260 AND ACI 212.1R AND A WATER-REDUCING ADMIXTURE COMPLYING WITH THE REQUIREMENTS OF ASTM C-494 AND ACI 212.1R. ADMIXTURES SHALL BE PURCHASE AND BATCHED IN LIQUID SOLUTION. THE USE OF CALCIUM CHLORIDE OR AN ADMIXTURE CONTAINING CALCIUM CHLORIDE IS PROHIBITED.

B. ADMIXTURES SHALL BE OF THE SAME MANUFACTURER TO ASSURE COMPATIBILITY.

C. ACCEPTABLE MANUFACTURERS ARE:

1. W.R. GRACE
2. SIKA GROUP
3. MASTER BUILDERS
4. EUCLID CHEMICAL CO

2.5 CURING COMPOUNDS

CURING COMPOUNDS SHALL CONFORM TO ASTM C309, TYPE 1, ID, CLASS A AND B AND ASTM C171 AS APPLICABLE

PART 3 EXECUTION

3.1 GENERAL

A. CONSTRUCT AND ERECT FORMWORK IN ACCORDANCE WITH ACI 301 ACI 347.

B. COLD-WEATHER CONCRETING SHALL BE IN ACCORDANCE WITH ACI 306.

C. HOT-WEATHER CONCRETING SHALL BE IN ACCORDANCE WITH ACI 305.

3.2 INSERTS, EMBEDDED COMPONENTS AND OPENINGS

A. CONTRACTOR SHALL CHECK ALL CIVIL, ARCHITECTURAL, STRUCTURAL, AND ELECTRICAL DRAWINGS FOR OPENINGS, SLEEVES, ANCHOR BOLTS, INSERTS AND OTHER ITEMS TO BE BUILT INTO THE CONCRETE WORK.

B. COORDINATE THE WORK OF OTHER SECTIONS IN FORMING AND SETTING OPENINGS, RECESSES, SLOTS, CHASES, ANCHORS, INSERTS AND OTHER ITEMS TO BE EMBEDDED.

C. EMBEDDED ITEMS SHALL BE SET ACCURATELY IN LOCATION, ALIGNMENT, ELEVATION, AND PLUMBNESS. LOCATE AND MEASURE FROM ESTABLISHED SURVEYED REFERENCE BENCHMARKS.

D. EMBEDDED ITEMS SHALL BE ANCHORED INTO PLACE AS REQUIRED TO PREVENT MOVEMENT DURING CONCRETE PLACEMENT AND CONSOLIDATION. COMPONENTS FORMING A PART OF A COMPLETE ASSEMBLY SHALL BE ALIGNED BEFORE ANCHORING. PROVIDE TEMPORARY BRACING, ANCHORAGE, AND TEMPLATES AS REQUIRED TO MAINTAIN THE SETTING AND ALIGNMENT.

3.3 REINFORCEMENT PLACEMENT:

A. REINFORCEMENT SHALL BE PLACED IN ACCORDANCE WITH CHECKED AND RELEASED DRAWINGS AND ACI 301 AND ACI 315; SECURELY WIRE-TIE REINFORCEMENT AT ALL INTERSECTIONS.

B. ACCURATELY POSITION, SUPPORT AND SECURE REINFORCEMENT AGAINST DISPLACEMENT FROM FORMWORK CONSTRUCTION OR CONCRETE PLACEMENT AND CONSOLIDATION. REINFORCING SHALL BE SUPPORTED ON METAL CHAIRS, RUNNERS, BOLSTERS, SPACERS, AND HANGERS.

C. SPLICES OF REINFORCING BARS SHALL BE CLASS B UNLESS SHOWN OTHERWISE. SPLICES SHALL BE STAGGERED. FULL DEVELOPMENT LENGTH SHALL BE PROVIDED ACROSS JOINTS.

D. LOCATE REINFORCING TO PROVIDE CONCRETE COVER AND SPACING SHOWN ON THE DRAWINGS. MINIMUM COVER SHALL BE AS REQUIRED BY ACI 318.

E. WELDING OF AND TO ANY REINFORCING MATERIALS INCLUDING TACK WELDING OF CROSSING BARS IS STRICTLY PROHIBITED. BARS SHALL BE FREE OF FLAKEY OR SCALEY RUST AT THE TIME THE CONCRETE IS PLACED.

3.4 CONCRETE PLACEMENT:

A. PRIOR TO PLACING CONCRETE, FORMS AND REINFORCEMENT SHALL BE THOROUGHLY INSPECTED. ALL WOOD CHIPS, DIRT, ETC., AS WELL AS ALL TEMPORARY BRACING, TIES, AND CLEATS REMOVED, AND ALL OPENINGS FOR UTILITIES PROPERLY BOXED, ALL FORMS SHALL BE PROPERLY SECURED IN THEIR CORRECT POSITION AND MADE TIGHT. ALL REINFORCING AND EMBEDDED ITEMS SHALL BE SECURED IN THEIR PROPER LOCATIONS.. ALL OLD AND DRY CONCRETE AN DIRT SHALL BE CLEANED AND ALL STANDING WATER AND OTHER FOREIGN MATTER REMOVED.

B. PLACING CONCRETE SHALL BE IN ACCORDANCE WITH ACI 301 AND ACI 304 AND SHALL BE CARRIED OUT AT SUCH A RATE THAT THE CONCRETE PREVIOUSLY PLACED IS STILL PLASTIC AND INTEGRATED WITH THE FRESHLY PLACE CONCRETE. CONCRETING, ONCE STARTED, SHALL BE CARRIED ON AS A CONTINUOUS OPERATION UNTIL THE SECTION IS COMPLETED. NO COLD JOINTS SHALL BE ALLOWED.

C. CONSTRUCTION JOINTS: USE KEYWAYS, CONTINUE REINFORCEMENT THROUGH JOINT.

D. EXPANSION JOINTS: FOR EXTERIOR WORK, LOCATE AT 30' O.C. MAXIMUM, AT APPROVED LOCATIONS. PROVIDE SMOOTH DOWELS ACROSS JOINT WHICH PERMIT 1" HORIZONTAL MOVEMENT AND NO VERTICAL SHEAR MOVEMENT.

E. ISOLATION JOINTS: PROVIDE BETWEEN SLABS AND VERTICAL ELEMENTS SUCH AS COLUMNS AND STRUCTURAL WALLS.

F. CONTROL JOINTS: PROVIDE SAWN OR TOOLED JOINTS OR REMOVABLE INSERT STRIPS; DEPTH EQUAL TO 1/4" SLAB THICKNESS. SPACING SHALL BE AS REQUIRED AND APPROVED.

G. ALL CONCRETE SHALL BE THOROUGHLY CONSOLIDATED AND COMPACTED BY VIBRATION, SPADING, RODDING, OR FORKING DURING THE OPERATION OF PLACING AND DEPOSITING IN ACCORDANCE WITH ACI 309. THE CONCRETE SHALL BE WORKED AROUND REINFORCEMENT, EMBEDDED ITEMS, AND INTO THE CORNERS OF THE FORMS SO AS TO ELIMINATE ALL AIR AND STONE POCKETS.

3.5 FINISHING:

A. FINISHING OF ALL SLABS SHALL BE IN ACCORDANCE WITH ACI 302.1; SECTION 7.2 WITH A MINIMUM OF THREE TROWELINGS.

1. INTERIOR SLAB FINISH TOLERANCE AS MEASURED IN ACCORDANCE WITH ASTM E 1155 SHALL HAVE AN OVERALL TEST F NUMBER FOR FLATNESS, FF=20 AND FOR LEVEL, FL=15. THE MINIMUM LOCAL NUMBER FOR FLATNESS, FF=15 AND FOR LEVEL, FL=10.

2. EXTERIOR SLAB FINISH SHALL BE FLAT (FF=20) AND SHALL BE SLOPED A MINIMUM OF 1/8" PER FOOT TO A MAXIMUM OF 1/4" PER FOOT TO PREVENT PONDING WATER.

B. SURFACES OF SLABS SHALL RECEIVE TWO COATS OF CLEAR SEALER/HARDNER.

C. ABOVE GRADE WALL SURFACES SHALL HAVE A SMOOTH FORM FINISH AS DEFINED IN CHAPTER 10 OF ACI 301.

3.6 CURING:

A. FRESHLY DEPOSITED CONCRETE SHALL BE PROTECTED FROM PREMATURE DRYING AND EXCESSIVELY HOT OR COLD TEMPERATURES AND SHALL BE MAINTAINED WITH MINIMAL MOISTURE LOSS AT A RELATIVELY CONSTANT TEMPERATURE FOR A PERIOD OF TIME NECESSARY FOR THE HYDRATION OF THE CEMENT AND PROPER HARDENING OF THE CONCRETE.

B. CURING SHALL IMMEDIATELY FOLLOW THE FINISH OPERATION. CONCRETE SHALL BE KEPT CONTINUOUSLY MOIST ATE LEAST OVERNIGHT, IMMEDIATELY FOLLOWING THE INITIAL CURING. BEFORE THE CONCRETE HAS DRIED, ADDITIONAL CURING SHALL BE ACCOMPLISHED BY ONE OF THE FOLLOWING MATERIALS OR METHODS:

1. PONDING OR CONTINUOUS SPRINKLING

2. ABSORPTIVE MAT OR FABRIC KEPT CONTINUOUSLY WET

3. NON-ABSORPTIVE FILM (POLYETHYLENE) OVER A PREVIOUSLY SPRINKLED SURFACE

4. SAND OR OTHER COVERING KEPT CONTINUOUSLY WET

5. CONTINUOUS STEAM (NOT EXCEEDING 150 DEGREES F) OR VAPOR MIST BATH.

6. SPRAYED-ON CURING COMPOUND APPLIED IN TWO COATES, SPRAYED IN PERPENDICULAR DIRECTIONS.

C. THE FINAL CURING SHALL CONTINUE UNTIL THE CUMULATIVE NUMBER OF DAYS OR FRACTION THEREOF, NOT NECESSARILY CONSECUTIVE, DURING WHICH TEMPERATURE OF THE AIR IN CONTACT WITH CONCRETE IS ABOVE 50 F HAS TOTALED SEVEN (7) DAYS. CONCRETE SHALL NOT BE PERMITTED TO FREEZE DURING THE CURING PERIOD. RAPID DRYING AT THE END OF THE CURING PERIOD SHALL BE PREVENTED.

END OF SECTION

STATE OF MISSOURI
ROBERT E. JENSEN
NUMBER
PE-028974
PROFESSIONAL ENGINEER

PLANS PREPARED FOR:
SKW
11250 Corporate Ave.
Lenexa, Kansas 66219
Phone: 913-888-7800
Fax: 913-438-7868

PLANS PREPARED BY:
SSC
9900 West 109th Street, Suite 300
Overland Park, Kansas 66210
Phone: 913-438-7700
Fax: 913-438-7777

ENGINEERING LICENSE:

STATE OF MISSOURI

PE CERTIFICATE OF AUTHORIZATION #001640

ENGINEER:		PE #:	DISCIPLINE:	
MLO	MICHAEL L. OWENS	E-29058	STRUCTURAL/CIVIL	SC
KV	KEVIN VANMAELE	E-21561	STRUCTURAL/CIVIL	SC
REJ	ROBERT E. JENSEN	E-26974	STRUCTURAL/CIVIL	SC
TMS	TERRANCE M. SUPER	E-18521	ELECTRICAL	E
SDK	SHELTON D. KEISLING	E-27323	ELECTRICAL	E
DEK	DAVE E. KASPER	E-16063	ELECTRICAL	E

DRAWING NOTICE:

THIS DRAWING HAS NOT BEEN PUBLISHED AND IS THE SOLE PROPERTY OF SSC, INC. AND IS LENT TO THE BORROWER FOR THEIR CONFIDENTIAL USE ONLY, AND IN CONSIDERATION OF THE LOAN OF THIS DRAWING,THE BORROWER PROMISES AND AGREES TO RETURN IT UPON REQUEST AND AGREES THAT IT WILL NOT BE REPRODUCED, COPIED, LENT OR OTHERWISE DISPOSED OF DIRECTLY OR INDIRECTLY, NOR USED FOR ANY PURPOSE OTHER THAN FOR WHICH IT IS FURNISHED.

SUBMITTALS

DESCRIPTION	DATE	BY	REV
ISSUED FOR REVIEW	03/19/14	JGH	A
ISSUED FOR CONSTRUCTION	06/24/14	DCP	0

SITE NAME:

CLAY COUNTY TOWER

SITE NUMBER:

SITE ADDRESS:

16530 NE 116TH ST
KEARNEY, MISSOURI
64060

SHEET DESCRIPTION:

SPECIFICATIONS (1 OF 7)

SSC #:

SHEET NUMBER:

SP-1

UNIT MASONRY SECTION 04 20 00

PART 1 GENERAL

1.1 SUMMARY

A. PROVIDE UNIT MASONRY CONSTRUCTION AS INDICATED ON THE DRAWINGS.

PART 2 PRODUCTS

2.1 MATERIALS

A. CLAY MASONRY UNITS:

1. APPLICATION: BRICK AND CONCRETE BLOCK CAVITY WALLS.

2. SIZE: STANDARD MODULAR, 3-5/8 INCHES THICK BY 2-1/4 INCHES HIGH BY 7-5/8 INCHES LONG OR AS INDICATED ON DRAWINGS.

3. TYPE: ASTM C 216, TYPE FBS, FOR GENERAL EXPOSED USE, OR AS INDICATED ON DRAWINGS. GRADE SHALL BE SW, UNLESS NOTED OTHERWISE ON DRAWINGS.

4. SPECIAL SHAPES: AS REQUIRED BY BUILDING CONFIGURATION. OR AS INDICATED ON DRAWINGS

5. BOND PATTERN: RUNNING BOND

B. CONCRETE MASONRY UNITS:

1. CONCRETE MASONRY UNITS: HOLLOW, LOAD-BEARING, NORMAL WEIGHT, ASTM C 90, GRADE N, TYPE 1, 1500 F'M COMPRESSIVE STRENGTH:

MEDIUM WEIGHT

2. SIZE: 7-5/8 " HIGH BY 15-5/8 LONG BY EITHER 7-5/8" OR 11-5/8" THICK OR AS INDICATED ON DRAWINGS.

3. SPECIAL SHAPES: AS REQUIRED BY BUILDING CONFIGURATION.

4. BOND PATTERN: RUNNING BOND UNLESS NOTED OR SHOWN DIFFERENTLY ON DRAWINGS.

C. LIMESTONE / PRECAST TRIM UNITS:

1. GRADE AND COLOR: AS SHOWN ON DRAWINGS

2. FINISH: AS IDENTIFIED ON DRAWINGS

D. MORTAR AND GROUT FOR BRICK AND CONCRETE MASONRY UNIT ASSEMBLIES:

1. MORTAR MIX: ASTM C 270, TYPE S, FOR REINFORCED MASONRY, MASONRY BELOW GRADE AND MASONRY IN CONTACT WITH EARTH AND ASTM C 270, TYPE N, FOR ABOVE-GRADE LOADBEARING AND NONLOADBEARING WALLS. PORTLAND CEMENT SHALL CONFORM TO ASTM C150, TYPE 1. MASONRY CEMENT SHALL CONFORM TO ASTM C91. FINE AGGREGATE SHALL CONFORM TO ASTM C144.

2. MORTAR COLOR: NATURAL COLOR UNLESS NOTED OTHERWISE ON DRAWINGS.

3. GROUT: ALL GROUT FOR FILLING BOND BEAMS AND REINFORCED CELLS SHALL CONFORM TO NON-AIR ENTRAINED GROUT PER ASTM C476 WITH PORTLAND CEMENT PER ASTM C150, TYPE 1, AND INE AND COARSE AGGREGATE PER ASTM C404.

E. REINFORCING STEEL: 1. REINFORCING BARS: ASTM A 615, GRADE 60. 2. WELDED WIRE FABRIC: ASTM A 185, PLAIN.

F. REINFORCING: WELDED WIRE WITH DEFORMED SIDE RODS.

1. STEEL WIRE: 9 GAUGE (.1875 INCH) GALVANIZED STEEL.

2. TRUSS TYPE

G. TIES AND ANCHORS:

1. BENT WIRE TIES: GALVANIZED STEEL.

2. RIGID ANCHORS: GALVANIZED STEEL STRAPS.

PART 3 EXECUTION

3.1 INSTALLATION

A. INSTALLATION OF MASONRY ASSEMBLIES:

1. COMPLY WITH PCA RECOMMENDED PRACTICES FOR LAYING CONCRETE BLOCK, BRICK INSTITUTE OF AMERICA BIA TECH NOTES, AND NCMA TEK BULLETINS.

2. COMPLY WITH COLD WEATHER AND WARM WEATHER PROTECTION PROCEDURES AS RECOMMENDED IN BIA TECH NOTES.

END OF SECTION

STRUCTURAL STEEL FRAMING SECTION 05 12 00

PART 1 GENERAL

1.1 SUMMARY

PROVIDE STRUCTURAL STEEL ASSEMBLIES, FABRICATIONS, AND ERECTION OF STEEL AND OTHER ITEMS AS SHOWN ON THE DRAWINGS OR REQUIRED FOR A COMPLETE INSTALLATION.

1.2 QUALITY ASSURANCE

A. COMPLY WITH ALL APPLICABLE GOVERNING CODES AND REGULATIONS. PROVIDE PRODUCTS OF ACCEPTABLE MANUFACTURERS, WHICH HAVE BEEN IN SATISFACTORY USE IN SIMILAR SERVICE FOR THREE YEARS. USE EXPERIENCED INSTALLERS. DELIVER, HANDLE, AND STORE MATERIALS IN ACCORDANCE WITH MANUFACTURER'S INSTRUCTIONS.

B. STANDARDS: AISC, CODE OF STANDARD PRACTICE FOR STEEL BUILDINGS AND BRIDGES, AND APPLICABLE REGULATIONS.

C. ARCHITECTURALLY EXPOSED STRUCTURAL STEEL: COMPLY WITH FABRICATION REQUIREMENTS, INCLUDING TOLERANCE LIMITS, AND INSTALLATION TOLERANCES OF AISC'S "CODE OF STANDARD PRACTICE FOR STEEL BUILDINGS AND BRIDGES" FOR STRUCTURAL STEEL.

D. ERECTION TOLERANCES: AISC STANDARDS.

1.3 SUBMITTALS:

A. SUBMIT FABRICATION AND ERECTION DRAWINGS SHOWING ALL DETAILS, CONNECTIONS, MATERIAL DESIGNATIONS, AND ALL TOP OF STEEL ELEVATIONS TO ENGINEER FOR APPROVAL:

B. WELDERS SHALL BE QUALIFIED AS PRESCRIBED IN AWS D1.1. PART 2 PRODUCTS

2.1 MATERIALS

A. STRUCTURAL STEEL:

1. STRUCTURAL STEEL SHAPES, PLATES, AND BARS: ASTM A 572, ASTM A-36.

2. COLD-FORMED STEEL TUBING: ASTM A 500, GRADE B.

3. STEEL PIPE: ASTM A 53, TYPE E OR S, GRADE B; OR ASTM A 501.

4. ANCHOR BOLTS: ASTM A 307, NON-HEADED TYPE

5. COMMON (MACHINE) BOLTS SHALL CONFORM TO ASTM A307 GRADE A AND NUTS TO ASTM A563. ONE COMMON BOLT ASSEMBLY SHALL CONSIST OF A BOLT, A HEAVY HEX NUT, AND A HARDENED WASHER. BOLTS AND NUTS TO BE HOT DIPPED GALVANIZED PER ASTM A153 IF EXPOSED.

6. HIGH STRENGTH BOLTS SHALL CONFORM TO ASTM A325 OR A490, AS APPLICABLE. ONE HIGH STRENGTH BOLT ASSEMBLY SHALL CONSIST OF A HEAVY HEX STRUCTURAL BOLT, A HEAVY HEX NUT, AND A HARDENED WASHER CONFORMING TO ASTM F436. THE HARDENED WASHER SHALL BE INSTALLED AGAINST THE ELEMENT TURNED IN TIGHTENING. BOLTS AND NUTS TO BE HOT-DIP GALVANIZED PER ASTM A153 IF EXPOSED.

7. AUXILIARY MATERIALS:

a. DIRECT TENSION INDICATORS: ASTM A 959

b. ELECTRODES FOR WELDING: AWS CODE; E70XX

8. GROUTS:

a. CEMENT GROUT: PORTLAND CEMENT, SAND.

b. METALLIC SHRINKAGE-RESISTANT GROUT: PREMIXED FERROUS AGGREGATE GROUTING COMPOUND ASTM C 1107.

c. NONMETALLIC SHRINKAGE-RESISTANT GROUT: PREMIXED NONMETALLIC GROUTING COMPOUND, ASTM C 1107.

B. SHOP PAINTING

1. GENERAL: ALL STRUCTURAL STEEL MATERIALS EXPOSED TO THE ELEMENTS SHALL BE HOT DIPPED GALVANIZED PER ASTM 123. ALL OTHER STRUCTURAL STEEL SHALL BE SHOP PRIMED.

a. DO NOT PAINT SURFACES TO BE WELDED OR HIGH-STRENGTH BOLTED WITH FRICTION-TYPE CONNECTIONS.

b. DO NOT PAINT SURFACES SCHEDULED TO RECEIVE SPRAYED-ON FIREPROOFING.

2. STRUCTURAL STEEL FACTORY APPLIED PRIMER PAINT: (FOR NON-GALVANIZED MATERIALS). STANDARD RED OXIDE, LEAD AND CHROMATE-FREE, NON-ASHPHALTIC, RUST-INHIBITING PRIMER COMPLYING WITH FS TT-P-664

3. ZINC COATED (HOT DIP GALVANIZED) PER ASTM A123 (AFTER FABRICATION): TOUCH_UP AFTER ERECTION: CLEAN AND WIRE BRUSH ANY ABRADED AND OTHER SPOTS WORN THROUGH ZINC COATING, INCLUDING THREADED PORTIONS OF BOLTS AND WELDS AND TOUCH_UP WITH GALVANIZING REPAIR PAINT.

C. FIELD PAINTING: REPAIR / TOUCH UP OF DAMAGED GALVANIZED OR PRIMED SURFACES:

a. FOR GALVANIZED SURFACES, USE ORGANIC ZINC-RICH COATING MATCHING THE APPEARANCE OF HOT-DIP GALVANIZING CONTAINING AT LEAST 65% - 69% OR ABOVE 92% METALLIC ZINC. BY WEIGHT IN THE DRY FILM, MEETING THE PERFORMANCE REQUIREMENTS OF THE FOLLOWING: ASTM A 780-01, DOD-P-21035B, MIL-P-46105, AND SSPC PS-12, PS-12.01, PS-20, PS-22, PS-29 AND PS-30

b. FOR PRIMED SURFACES, CLEAN ALL SURFACES AND RE-PRIME PER RECOMMENDATIONS OF ORIGINAL PRIME MATERIALS.

PART 3 EXECUTION

3.1 FABRICATION

A. SHOP FABRICATE AND ASSEMBLE MATERIALS AS SPECIFIED HEREIN:

1. FABRICATE ITEMS IN ACCORDANCE WITH THE AISC-ASD SPECIFICATIONS

2. ALL EXPOSED STRUCTURAL STEEL SHALL BE HOT DIP GALVANIZED PER ASTM A123

3. PROPERLY MARK AND MATCH-MARK MATERIALS FOR FIELD ASSEMBLY AND FOR IDENTIFICATION AS TO LOCATION FOR WHICH INTENDED

4. FABRICATE AND DELIVER IN A SEQUENCE WHICH WILL EXPEDITE ERECTION AND MINIMIZE FIELD HANDLING OF MATERIALS.

5. PROVIDE FINISH SURFACE OF MEMBERS EXPOSED IN THE FINAL STRUCTURE FREE FROM MARKINGS, BURRS, AND OTHER DEFECTS.

B. CONNECTIONS

1. PROVIDE BOLTS AND WASHERS OF TYPES AND SIZE REQUIRED FOR COMPLETION OF FIELD ERECTION. USE ¾ INCH DIAMETER A325 N BOLTS UNLESS NOTED OTHERWISE.

2. INSTALL HIGH STRENGTH THREADED FASTENERS IN ACCORDANCE WITH RCSC "SPECIFICATIONS FOR STRUCTURAL JOINTS" USING ASTM A325 N OR ASTM A490 BOLTS."

3. WELDED CONSTRUCTION SHALL COMPLY WITH AWS D1.1 FOR PROCEDURES, APPEARANCE, QUALITY OF WELDS, AND METHODS USED IN CORRECTING WELDED WORK.

4. THE FABRICATOR SHALL FURNISH AND INSTALL ERECTION CLIPS FOR FIT-UP OF WELDED CONNECTIONS.

5. DOUBLE ANGLE MEMBERS SHALL HAVE WELDED FILLERS SPACED IN ACCORDANCE WITH CHAPTER E4 OF THE AISC-ASD SPECIFICATION.

6. GUSSET AND STIFFENER PLATES SHALL BE 3/8 INCH THICK MINIMUM.

3.2 INSTALLATION

A. INSTALLATION OF STRUCTURAL STEEL SHALL COMPLY WITH AISC "CODE OF STANDARD PRACTICE".

B. STRUCTURAL FIELD WELDING SHALL BE DONE BY THE ELECTRIC SUBMERGED OR SHIELDED METAL ARC PROCESS. WELDED CONSTRUCTION SHALL COMPLY WITH AWS D1.1

C. PROVIDE TEMPORARY SHORING AND BRACING WITH CONNECTIONS OF SUFFICIENT STRENGTH TO BEAR IMPOSED LOADS. REMOVE WHEN FINAL CONNECTIONS HAVE BEEN MADE.

D. ALIGN AND ADJUST MEMBERS AS REQUIRED PRIOR TO FINAL INSPECTION.

E. INSTALL AND FULLY TENSION HIGH STRENGTH THREADED FASTENERS IN ACCORDANCE WITH RCSC, "SPECIFICATIONS FOR STRUCTURAL JOINTS" USING ASTM A 325 N OR ASTM A 490 BOLTS."

3.3 FINAL INSPECTION

A. CLEAN ALL SURFACES UPON COMPLETION OF WORK

B. COMPLY WITH AISC CODES AND SPECIFICATIONS, AND WITH AWS "STRUCTURAL WELDING CODE".

C. TOUCH-UP FIELD WELDS AND ABRADED AREAS AS REQUIRED.

END OF SECTION

STATE OF MISSOURI
ROBERT E. JENSEN
NUMBER
PE-028974
PROFESSIONAL ENGINEER

PLANS PREPARED FOR:

SKW

11250 Corporate Ave.
Lenexa, Kansas 66219
Phone: 913-888-7800
Fax: 913-438-7868

PLANS PREPARED BY:

SSC

9900 West 109th Street, Suite 300
Overland Park, Kansas 66210
Phone: 913-438-7700
Fax: 913-438-7777

ENGINEERING LICENSE:

STATE OF MISSOURI

PE CERTIFICATE OF AUTHORIZATION #001640

ENGINEER:		PE #:	DISCIPLINE:	
MLO	MICHAEL L. OWENS	E-29058	STRUCTURAL/CIVIL	SC
KV	KEVIN VANMAELE	E-21561	STRUCTURAL/CIVIL	SC
REJ	ROBERT E. JENSEN	E-28974	STRUCTURAL/CIVIL	SC
TMS	TERRANCE M. SUPER	E-18521	ELECTRICAL	E
SDK	SHELTON D. KEISLING	E-27323	ELECTRICAL	E
DEK	DAVE E. KASPER	E-18063	ELECTRICAL	E

DRAWING NOTICE:

THIS DRAWING HAS NOT BEEN PUBLISHED AND IS THE SOLE PROPERTY OF SSC, INC. AND IS LENT TO THE BORROWER FOR THEIR CONFIDENTIAL USE ONLY. AND IN CONSIDERATION OF THE LOAN OF THIS DRAWING,THE BORROWER PROMISES AND AGREES TO RETURN IT UPON REQUEST AND AGREES THAT IT WILL NOT BE REPRODUCED, COPIED, LENT OR OTHERWISE DISPOSED OF DIRECTLY OR INDIRECTLY, NOR USED FOR ANY PURPOSE OTHER THAN FOR WHICH IT IS FURNISHED.

SUBMITTALS

DESCRIPTION	DATE	BY	REV
ISSUED FOR REVIEW	03/19/14	JRH	A
ISSUED FOR CONSTRUCTION	06/24/14	DCP	0

SITE NAME:

CLAY COUNTY TOWER

SITE NUMBER:

SITE ADDRESS:

16530 NE 116TH ST
KEARNEY, MISSOURI
64060

SHEET DESCRIPTION:

SPECIFICATIONS (2 OF 7)

SSC #:

SHEET NUMBER:

SP-2

COMMUNICATIONS/ANTENNA'S SECTION 27 00 00

GENERAL:

1.1 WORK INCLUDED

A. ANTENNA AND COAXIAL CABLES ARE FURNISHED BY OWNER UNDER SEPARATE CONTRACT. THE CONTRACTOR SHALL ASSIST ANTENNA INSTALLATION CONTRACTOR IN TERMS OF COORDINATION AND SITE ACCESS. ERECTION SUBCONTRACTOR SHALL BE RESPONSIBLE FOR THE PROTECTION OF PERSONNEL AND PROPERTY FROM HAZARDOUS EXPOSURE TO OVERHEAD DANGER.

B. INSTALL ANTENNAS AS INDICATED ON DRAWINGS AND OWNER SPECIFICATIONS.

C. INSTALL GALVANIZED STEEL ANTENNA MOUNTS AS INDICATED ON DRAWINGS.

D. INSTALL FURNISHED GALVANIZED STEEL WAVEGUIDE LADDER AS INDICATED ON DRAWINGS.

E. THE CONTRACTOR SHALL PROVIDE FREQUENCY DOMAIN REFLECTOMETER (FDR) TEST RESULTS TO THE CONSTRUCTION MANAGER AND OWNER WITHIN ONE WEEK OF COMPLETION.

F. INSTALL COAXIAL CABLES AND TERMINATORS BETWEEN ANTENNAS AND EQUIPMENT PER MANUFACTURER'S RECOMMENDATIONS. WEATHERPROOF ALL CONNECTORS BETWEEN THE ANTENNA AND EQUIPMENT PER MANUFACTURER'S REQUIREMENTS. TERMINATE ALL COAXIAL CABLE THREE (3) FEET IN EXCESS OF ENTRY PORT LOCATION UNLESS OTHERWISE STATED.

G. ANTENNA AND COAXIAL CABLE GROUNDING:

1. ALL COAXIAL CABLE GROUNDING CONNECTIONS ARE TO BE WEATHER SEALED WITH ANDREW CONNECTOR/SPLICE WEATHERPROOFING KITS OR EQUIVALENT.

2. ALL COAXIAL CABLE GROUNDING KITS ARE TO BE INSTALLED ON STRAIGHT RUNS OF COAXIAL CABLE (NOT WITHIN BENDS)

1.2 RELATED WORK

A. FURNISH THE FOLLOWING WORK AS SPECIFIED UNDER CONSTRUCTION DOCUMENTS, BUT COORDINATE WITH OTHER TRADES PRIOR TO BID:

1. FLASHING OF OPENING INTO OUTSIDE WALLS.

2. SEAL AND CAULK ALL OPENINGS.

3. PAINTING.

4. CUTTING AND PATCHING.

1.3 REQUIREMENTS OF REGULATOR AGENCIES

A. FURNISH UL LISTED EQUIPMENT WHERE SUCH LABEL IS AVAILABLE, INSTALL IN CONFORMANCE WITH UL STANDARDS WHERE APPLICABLE.

B. INSTALL ANTENNA, ANTENNA CABLES, AND GROUNDING SYSTEM IN ACCORDANCE WITH DRAWINGS AND SPECIFICATIONS IN EFFECT AT PROJECT LOCATION AND RECOMMENDATIONS OF STATE AND LOCAL BUILDING CODES, AND ANY SPECIAL CODES HAVING JURISDICTION OVER SPECIFIC PORTIONS OF WORK. THIS INCLUDES BUT IS NOT LIMITED TO THE FOLLOWING:

1. TIA – TELECOMMUNICATIONS INDUSTRY ASSOCIATION –222; STRUCTURAL STANDARDS FOR STEEL ANTENNA TOWERS AND ANTENNA SUPPORTING STRUCTURES.

2. FAA – FEDERAL AVIATION ADMINISTRATION ADVISORY CIRCULAR AC 70/7460–1K, OBSTRUCTION MARKING AND LIGHTING.

3. FCC – FEDERAL COMMUNICATIONS COMMISSION RULES AND REGULATIONS OBSTRUCTION MARKING AND LIGHTING SPECIFICATIONS FOR ANTENNA STRUCTURES AND HIGH INTENSITY OBSTRUCTION LIGHTING SPECIFICATIONS FOR ANTENNA STRUCTURES.

4. AISC – AMERICAN INSTITUTE OF STEEL CONSTRUCTION SPECIFICATION FOR STRUCTURAL JOINTS USING ASTM A325 OR A490 BOLTS.

5. NEC – NATIONAL ELECTRICAL CODE FOR TOWER LIGHTING KITS.

6. UL – UNDERWRITERS LABORATORIES APPROVED ELECTRICAL PRODUCTS.

7. IN ALL CASES, THE FAA RULES AND THE FCC RULES ARE APPLICABLE AND IN THE EVENT OF CONFLICT, SUPERSEDE ANY OTHER STANDARDS OR SPECIFICATIONS.

8. LIFE SAFETY CODE NFPA, LATEST EDITION.

SITE CLEARING / EROSION CONTROL SECTION 31 00 00

PART 1 GENERAL

1.1 SUMMARY

A. PROVIDE SITE–CLEARING AS REQUIRED TO COMPLETE WORK AS SHOWN ON CONTRACT DOCUMENTS INCLUDING CLEARING, GRUBBING, STRIPPING, EROSION AND SILTATION CONTROL, AND PROTECTION OF LANDSCAPE MATERIALS DESIGNATED TO BE PROTECTED DURING CONSTRUCTION.

1.2 QUALITY ASSURANCE

A. COMPLY WITH GOVERNING CODES AND REGULATIONS.

B. SITE PROTECTION: PROVIDE ALL NECESSARY JOB SITE MAINTENANCE FROM COMMENCEMENT OF WORK UNTIL COMPLETION OF THE SUBCONTRACT

C. AVOID DAMAGE TO THE SITE AND TO EXISTING FACILITIES, STRUCTURES, TREES, AND SHRUBS DESIGNATED TO REMAIN. TAKE PROTECTIVE MEASURES TO PREVENT EXISTING FACILITIES THAT ARE NOT DESIGNATED FOR REMOVAL FROM BEING DAMAGED BY THE WORK.

PART 2 PRODUCTS

2.1 MATERIALS

A. TREE PROTECTION, EROSION CONTROL, SILTATION CONTROL, AND DUST CONTROL MATERIALS SUITABLE FOR SITE CONDITIONS.

PART 3 EXECUTION

3.1 SITE CLEARING OPERATIONS

A. PROTECTION OF EXISTING TREES, VEGETATION, LANDSCAPING, AND SITE IMPROVEMENTS NOT SCHEDULED FOR CLEARING WHICH MIGHT BE DAMAGED BY CONSTRUCTION ACTIVITIES.

B. TRIMMING OF EXISTING TREES AND VEGETATION AS RECOMMENDED BY ARBORIST FOR PROTECTION DURING CONSTRUCTION ACTIVITIES.

C. CLEARING AND GRUBBING OF STUMPS AND VEGETATION, AND REMOVAL AND DISPOSAL OF DEBRIS, RUBBISH, DESIGNATED TREES, AND SITE IMPROVEMENTS.

D. TOPSOIL STRIPPING AND STOCKPILING.

E. TEMPORARY EROSION CONTROL, SILTATION CONTROL, AND DUST CONTROL.

F. TEMPORARY PROTECTION OF ADJACENT PROPERTY, STRUCTURES, BENCHMARKS, AND MONUMENTS.

G. WATERING OF TREES AND VEGETATION DURING CONSTRUCTION ACTIVITIES.

H. REMOVAL AND LEGAL DISPOSAL OF CLEARED MATERIALS.

I. MAINTAIN ALL EXISTING FENCING AND GATES TO MAINTAIN A SECURE SITE AT ALL TIMES.

J. PROVIDE AND MAINTAIN ALL TEMPORARY FENCING, BARRICADES, WARNING SIGNALS AND SIMILAR DEVICES NECESSARY TO PROTECT LIFE AND PROPERTY DURING THE ENTIRE PERIOD OF CONSTRUCTION. REMOVE ALL SUCH DEVICES UPON COMPLETION OF THE WORK.

3.2 CLEARING

A. PREVENT DAMAGE TO EXISTING IMPROVEMENTS INDICATED TO REMAIN, INCLUDING ON AND OFF SITE. PROTECT EXISTING TREES AND VEGETATION INDICATED TO REMAIN. DO NOT STOCKPILE MATERIALS AND RESTRICT TRAFFIC WITHIN DRIP LINE OF EXISTING TREES TO REMAIN OR THAT INTERFERE WITH ACCESS TO SITE. PROVIDE AND MAINTAIN TEMPORARY GUARDS TO ENCIRCLE TREES OR GROUPS OF TREES TO REMAIN; OBTAIN APPROVAL BEFORE BEGINNING WORK.

B. WATER VEGETATION AS REQUIRED TO MAINTAIN HEALTH. COVER TEMPORARILY EXPOSED ROOTS WITH WET BURLAP AND BACKFILL AS SOON AS POSSIBLE. COAT CUT PLANT SURFACES WITH APPROVED EMULSIFIED ASPHALT PLANT COATING.

C. REPAIR OR REPLACE VEGETATION DESIGNATED FOR REUSE, WHICH HAS BEEN DAMAGED. REMOVE HEAVY GROWTHS OF GRASS BEFORE STRIPPING. STOCKPILE SATISFACTORY TOPSOIL CONTAINING NO LARGE STONES, FOREIGN MATTER AND WEEDS ON SITE FOR REUSE.

D. COMPLETELY REMOVE ALL IMPROVEMENTS, STUMPS AND DEBRIS EXCEPT FOR THOSE INDICATED TO REMAIN. REMOVE BELOW GRADE IMPROVEMENTS AT LEAST 12" BELOW FINISH GRADE SO AS NOT TO INTERFERE WITH NEW CONSTRUCTION. REMOVE ABANDONED MECHANICAL AND ELECTRICAL WORK AS REQUIRED.

E. PREVENT EROSION AND SILTATION OF STREETS, CATCH BASINS AND PIPING. CONTROL WINDBLOWN DUST. REMOVE WASTE MATERIALS AND UNSUITABLE SOIL FROM SITE AND DISPOSE OF IN A LEGAL MANNER.

F. EXCEPT WHERE EXCAVATION TO GREATER DEPTH IS INDICATED, FILL DEPRESSIONS RESULTING FROM CLEARING, GRUBBING AND DEMOLITION WORK COMPLETELY WITH SUITABLE FILL AND COMPACT AS REQUIRED.

3.3 EROSION CONTROL

A. PROVIDE EROSION AND SILTATION CONTROL AS REQUIRED TO MEET ALL LOCAL AND STATE REQUIREMENTS. END OF SECTION

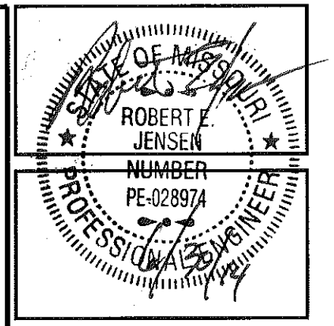

PLANS PREPARED FOR:

SKW

11250 Corporate Ave.
Lenexa, Kansas 66219
Phone: 913-888-7800
Fax: 913-438-7868

PLANS PREPARED BY:

SSC

9900 West 109th Street, Suite 300
Overland Park, Kansas 66210
Phone: 913-438-7700
Fax: 913-438-7777

ENGINEERING LICENSE:

STATE OF MISSOURI

PE CERTIFICATE OF AUTHORIZATION #001640

ENGINEER:		PE #:	DISCIPLINE:	
MLO	MICHAEL L. OWENS	E-29058	STRUCTURAL/CIVIL	SC
KV	KEVIN VANMAELE	E-21561	STRUCTURAL/CIVIL	SC
REJ	ROBERT E. JENSEN	E-26974	STRUCTURAL/CIVIL	SC
TMS	TERRANCE M. SUPER	E-18521	ELECTRICAL	E
SDK	SHELTON D. KEISLING	E-27323	ELECTRICAL	E
DEK	DAVE E. KASPER	E-18063	ELECTRICAL	E

DRAWING NOTICE:

THIS DRAWING HAS NOT BEEN PUBLISHED AND IS THE SOLE PROPERTY OF SSC, INC. AND IS LENT TO THE BORROWER FOR THEIR CONFIDENTIAL USE ONLY, AND IN CONSIDERATION OF THE LOAN OF THIS DRAWING, THE BORROWER PROMISES AND AGREES TO RETURN IT UPON REQUEST AND AGREES THAT IT WILL NOT BE REPRODUCED, COPIED, LENT OR OTHERWISE DISPOSED OF DIRECTLY OR INDIRECTLY, NOR USED FOR ANY PURPOSE OTHER THAN FOR WHICH IT IS FURNISHED.

SUBMITTALS

DESCRIPTION	DATE	BY	REV
ISSUED FOR REVIEW	03/19/14	JRH	A
ISSUED FOR CONSTRUCTION	06/24/14	DCP	0

SITE NAME:

CLAY COUNTY TOWER

SITE NUMBER:

SITE ADDRESS:

16530 NE 116TH ST
KEARNEY, MISSOURI
64060

SHEET DESCRIPTION:

SPECIFICATIONS (3 OF 7)

SSC #:

SHEET NUMBER:

SP-3

EARTH MOVING / EXCAVATION / BACKFILLING SECTION 31 20 00

PART 1 GENERAL

1.1 SUMMARY

PROVIDE EARTHWORK OPERATIONS INCLUDING BUT NOT LIMITED TO EXCAVATION, GRADING, TRENCHING AND COMPACTION.

1.2 QUALITY ASSURANCE COMPACTION:

UNDER STRUCTURES, BUILDING SLABS, STEPS, PAVEMENTS, AND WALKWAYS, 95 PERCENT MAXIMUM DENSITY, ASTM D 1557.

A. GRADING TOLERANCES:

1. LAWNS, UNPAVED AREAS, AND WALKS, PLUS OR MINUS 1 INCH.

2. KEEP SITE FREE FROM ANY PONDING WATER

3. GRADING TOLERANCE FOR FILL UNDER BUILDING OR EQUIPMENT SLABS: PLUS OR MINUS 1/4 INCH MEASURED WITH 10-FOOT STRAIGHTEDGE.

B. TESTING: FIELD TESTING OF EARTHWORK AND COMPACTION SHALL BE PERFORMED BY OWNER'S INDEPENDENT TESTING LAB. THIS WORK IS TO BE COORDINATED BY THE CONTRACTOR.

C. ALL WORK SHALL BE INSPECTED AND RELEASED BY THE OWNER OR HIS AGENT WHO SHALL CARRY OUT THE GENERAL INSPECTION OF THE WORK AS SPECIFIED AND/OR CALLED OUT BY THE CONSTRUCTION DOCUMENTS. PROVIDE A MINIMUM OF 48 HOURS NOTICE PRIOR TO ANY PLACEMENT OF CONCRETE OR BACKFILLING OF TRENCHES. IT IS THE CONTRACTOR'S RESPONSIBILITY TO REQUEST TIMELY INSPECTIONS PRIOR TO PROCEEDING WITH FURTHER WORK THAT WOULD MAKE PARTS OF WORK INACCESSIBLE OR DIFFICULT TO INSPECT.

D. EXISTING UTILITIES: DO NOT INTERRUPT EXISTING UTILITIES SERVING FACILITIES OCCUPIED BY THE OWNER OR OTHERS, EXCEPT WHEN PERMITTED IN WRITING BY OWNER OR HIS AGENT AND THEN ONLY AFTER ACCEPTABLE TEMPORARY UTILITY SERVICES HAVE BEEN PROVIDED.

PART 2 PRODUCTS

2.1 GENERAL

A. UTILITY TRENCH: PROVIDE WELL GRADED SAND (SW-SM) FROM BASE OF TRENCH TO MINIMUM ABOVE THE HIGHEST CONDUIT WITHIN TRENCH. REMAINDER OF TRENCH AREA CAN BE EITHER AB 3 OR CLEAN GRAVEL AS DESCRIBED HEREIN. COMPACT AS REQUIRED TO PREVENT SETTLING.

B. ACCESS ROADS: 6" MINIMUM (UNLESS NOTED OTHERWISE ON DRAWINGS) COMPACTED AB 3 OR APPROVED EQUAL (UNWASHED CRUSHED LIMESTONE GRAVEL CONSISTING OF MULTIPLE AGGREGATE SIZES, ROCK CHIPS, AND ROCK DUST.)

C. COMPOUND (NEW CONSTRUCTION): 2" THICK CLEAN GRAVEL, WITH 100% PASSING THROUGH A 1" SIEVE OVER 4 INCH COMPACTED AB 3.

D. COMPOUND (EXISTING): PROVIDE CLEAN GRAVEL WITH 100% PASSING THROUGH A 1" SIEVE AS REQUIRED TO BRING COMPOUND TO PROPER GRADE OR REPAIR EXISTING DAMAGED AREAS.

E. STRUCTURAL FILL: PROVIDE 4" MINIMUM AB 3 BELOW STRUCTURES OR SLABS

2.2 MATERIALS

A. GEOTEXTILE FABRIC: PROVIDE MIRAFI 500X OR APPROVED EQUAL.

B. PLASTIC MARKING TAPE: SHALL BE ACID AND ALKALI RESISTANT POLYETHYLENE FILM SPECIFICALLY WIDE WITH A MINIMUM THICKNESS OF "MANUFACTURED FOR MARKING AND LOCATING UNDERGROUND UTILITIES,

C. PLASTIC MARKING TAPE: SHALL BE ACID AND ALKALI RESISTANT POLYETHYLENE FILM SPECIFICALLY MANUFACTURED FOR MARKING AND LOCATING UNDERGROUND UTILITIES, 6" WIDE WITH A MINIMUM THICKNESS OF 0.004 INCH. TAPE SHALL HAVE MINIMUM STRENGTH OF 1500 PSI IN BOTH DIRECTIONS AND MANUFACTURED WITH INTEGRAL WIRES OR OTHER MEANS TO ENABLE DETECTION BY A METAL DETECTOR WHEN BURIED UP TO 3 FEET DEEP. THE CORE OF THE TAPE SHALL BE ENCASED IN A PROTECTIVE JACKET OR OTHER MEANS TO PROTECT FROM CORROSION. TAPE COLOR SHALL BE RED FOR ELECTRIC UTILITIES AND ORANGE FOR TELECOMMUNICATION

PART 3 EXECUTION

3.1 INSTALLATION

A. PRIOR TO EXCAVATING, THOROUGHLY EXAMINE AREA TO BE EXCAVATED AND/OR TRENCHED TO VERIFY THE LOCATIONS OF FEATURES ON THE DRAWINGS AND TO ASCERTAIN THE EXISTENCE OF ANY STRUCTURE NOT SHOWN THAT MIGHT INTERFERE WITH NEW CONSTRUCTION. NOTIFY THE OWNER OR HIS AGENT OF ANY OBSTRUCTIONS THAT WILL PREVENT ACCOMPLISHMENT OF THE WORK AS INDICATED ON THE DRAWINGS.

B. EXCAVATION IS UNCLASSIFIED AND INCLUDES EXCAVATION TO SUBGRADE REGARDLESS OF MATERIALS. REPAIR EXCAVATIONS BEYOND ELEVATIONS AND DIMENSIONS INDICATED AS REQUIRED.

C. MAINTAIN STABILITY OF EXCAVATIONS; COORDINATE SHORING AND BRACING AS REQUIRED BY AUTHORITIES HAVING JURISDICTION. PREVENT SURFACE AND SUBSURFACE WATER FROM ACCUMULATING IN EXCAVATIONS. STOCKPILE SATISFACTORY MATERIALS FOR REUSE, ALLOW FOR PROPER DRAINAGE.

D. COMPACT MATERIALS AT THE OPTIMUM MOISTURE CONTENT AS DETERMINED BY ASTM D 1557 BY AERATION OR WETTING TO 95%%% OF MAXIMUM DRY DENSITY TO SUITABLE DEPTH.

E. PLACE ACCEPTABLE MATERIALS IN LAYERS NOT MORE THAN 8" LOOSE DEPTH FOR MATERIALS COMPACTED BY HEAVY EQUIPMENT AND NOT MORE THAN 4" LOOSE DEPTH FOR MATERIALS COMPACTED BY HAND EQUIPMENT TO SUBGRADES INDICATED AS FOLLOWS:

1. STRUCTURAL FILL: USE UNDER FOUNDATIONS, SLABS ON GRADE IN LAYERS AS INDICATED.

2. DRAINAGE FILL: USE UNDER DESIGNATED BUILDING SLABS, AT FOUNDATION DRAINAGE AND ELSEWHERE AS INDICATED.

3. COMMON FILL: USE UNDER UNPAVED AREAS.

4. SUBBASE MATERIAL: USE UNDER GENERAL COMPOUND AREA. IF THICKNESS OF LIFT IS GREATER THAN 6 SPREAD AND COMPACT THE CRUSHED STONE IN MULTIPLE LIFTS OF EQUAL THICKNESS WITH A MAXIMUM LIFT OF "6

F. GRADE TO 1/2" ABOVE OR BELOW REQUIRED SUBGRADE AND TO A TOLERANCE OF 1/4" IN 10'.

G. PROTECT NEWLY GRADED AREAS FROM TRAFFIC AND EROSION. RE-COMPACT AND RE-GRADE SETTLED, DISTURBED AND DAMAGED AREAS TO RESTORE QUALITY, APPEARANCE, AND CONDITION.

H. CONTROL EROSION TO PREVENT RUNOFF INTO SEWERS OR DAMAGE TO AREAS.

I. CONTROL DUST TO PREVENT HAZARDS TO ADJACENT PROPERTIES AND VEHICLES. IMMEDIATELY REPAIR OR REMEDY DAMAGE CAUSED BY DUST INCLUDING AIR FILTERS IN EQUIPMENT AND VEHICLES. CLEAN SOILED SURFACES.

J. DISPOSE OF WASTE AND UNSUITABLE MATERIALS OFF-SITE IN A LEGAL MANNER.

3.2 BACKFILL

A. AS SOON AS PRACTICAL AFTER COMPLETING CONSTRUCTION OF THE RELATED STRUCTURE, INCLUDING THE SPECIFIED MINIMUM CURING PERIOD FOR CAST-IN-PLACE CONCRETE, BACKFILL THE EXCAVATION WITH APPROVED MATERIAL TO RESTORE THE REQUIRED FINISHED GRADE.

1. PRIOR TO PLACING BACKFILL AROUND STRUCTURES, ALL FORMS SHALL HAVE BEEN REMOVED AND THE EXCAVATION CLEANED OF ALL TRASH, DEBRIS, AND UNSUITABLE MATERIALS.

2. BACKFILL BY PLACING AND COMPACTING SUITABLE BACKFILL MATERIAL OR SELECT GRANULAR BACKFILL MATERIAL, WHEN REQUIRED IN UNIFORM HORIZONTAL LAYERS OF NO GREATER THAN 8 INCHES LOOSE THICKNESS. WHERE HAND OPERATED COMPACTORS ARE USED, THE FILL MATERIAL SHALL BE PLACED IN LIFTS NOT TO EXCEED 4 INCHES IN LOOSE DEPTH.

3. IF THE DENSITY TESTING INDICATES THAT THE SPECIFIED DENSITY, THE SUCCEEDING LAYER SHALL NOT BE PLACED UNTIL THE SPECIFICATION REQUIREMENTS ARE MET UNLESS AUTHORIZED BY THE GEO-TECHNICAL ENGINEER. THE CONTRACTOR SHALL TAKE WHATEVER APPROPRIATE ACTION IS NECESSARY TO OBTAIN PROPER COMPACTION.

B. COMPACT EACH LAYER OF BACKFILL TO A MINIMUM OF 95% OF THE MAXIMUM DRY DENSITY AS PROVIDED BY THE STANDARD PROCTOR TEST, ASTM D 698.

3.3 TRENCH EXCAVATION:

A. UTILITY TRENCHES SHALL BE EXCAVATED TO THE LINES AND GRADES SHOWN ON THE DRAWINGS OR AS DIRECTED BY THE OWNER OR HIS AGENT. PROVIDE SHORING, SHEETING AND BRACING AS REQUIRED TO PREVENT CAVING OR SLOUGHING OF THE TRENCH WALLS.

B. EXTEND THE TRENCH WIDTH A MINIMUM OF 6 INCHES BEYOND THE OUTSIDE EDGE OF THE OUTER-- MOST CONDUIT.

C. WHEN SOFT, YIELDING, OR OTHERWISE UNSTABLE SOIL CONDITIONS ARE ENCOUNTERED, BACKFILL AT THE REQUIRED TRENCH TO A DEPTH OF NO LESS THAN 12 INCHES BELOW THE REQUIRED ELEVATION AND BACKFILL WITH GRANULAR BEDDING MATERIAL.

3.4 TRENCH BACKFILL

A. PROVIDE GRANULAR BEDDING MATERIAL (WELL GRADED SAND) IN ACCORDANCE WITH THE DRAWINGS AND THE UTILITY REQUIREMENTS.

B. NOTIFY THE OWNER OR HIS AGENT 24 HOURS IN ADVANCE OF BACKFILLING.

C. CONDUCT UTILITY CHECK TESTS BEFORE BACKFILLING. BACKFILL AND COMPACT TRENCH BEFORE ACCEPTANCE TESTING.

D. PLACE GRANULAR TRENCH BACKFILL UNIFORMLY ON BOTH SIDES OF THE CONDUITS IN 6-INCH UNCOMPACTED LIFTS UNTIL 6 INCHES OVER THE CONDUITS. SOLIDLY RAM AND TAMP BACKFILL INTO SPACES AROUND CONDUITS.

E. PROTECT CONDUIT FROM LATERAL MOVEMENT, IMPACT DAMAGE, OR UNBALANCED LOADING.

F. ABOVE THE CONDUIT EMBEDMENT ZONE, PLACE AND COMPACT BACKFILL MATERIAL IN 8 INCH MAXIMUM LOOSE THICKNESS LIFTS TO RESTORE THE REQUIRED FINISHED SURFACE GRADE.

G. COMPACT FINAL TRENCH BACKFILL TO A DENSITY EQUAL TO OR GREATER THAN EXISTING UNDISTURBED MATERIAL ADJACENT TO THE TRENCH BUT NO LESS THAN A MINIMUM OF 95% OF THE MAXIMUM DRY DENSITY AS PROVIDED BY THE STANDARD PROCTOR TEST, ASTM D 698.

3.5 AGGREGATE ACCESS ROAD (IF APPLICABLE)

A. CLEAR, GRUB, STRIP AND EXCAVATE FOR ACCESS ROAD TO THE LINES AND GRADES INDICATED ON DRAWINGS. SCARIFY TO A DEPTH OF 6 INCHES AND PROOF-ROLL ALL HOLES, RUTS, SOFT PLACES AND OTHER DEFECTS.

B. THE ENTIRE SUBGRADE SHALL BE COMPACTED TO NOT LESS THAN 95% OF THE MAXIMUM DRY DENSITY AS PROVIDED BY THE STANDARD PROCTOR TEST, ASTM D 1557.

C. AFTER PREPARATION OF THE SUBGRADE IS COMPLETE, THE GEOTEXTILE FABRIC (MIRAFI 500X) SHALL BE INSTALLED TO THE LIMITS INDICATED ON DRAWINGS BY ROLLING THE FABRIC OUT LONGITUDINALLY ALONG ROADWAY. THE FABRIC SHALL NOT BE DRAGGED ACROSS THE SUBGRADE. PLACE THE ENTIRE ROLL IN A SINGLE OPERATION, SMOOTHLY AS POSSIBLE.

1. OVERLAPS PARALLEL TO THE ROADWAY WILL BE PERMITTED AT THE CENTERLINE AND AT LOCATIONS BEYOND THE ROADWAY SURFACE WIDTH. NO LONGITUDINAL OVERLAPS SHALL BE LOCATED BETWEEN THE CENTERLINE AND THE SHOULDER. PARALLEL OVERLAPS SHALL BE A MINIMUM OF 3 FEET WIDE.

2. TRANSVERSE OR PERPENDICULAR OVERLAPS AT THE END OF A ROLL SHALL OVERLAP IN THE DIRECTION OF THE AGGREGATE PLACEMENT (PREVIOUS ROLL ON TOP) AND SHALL HAVE A MINIMUM LENGTH OF 3 FEET.

3. ALL OVERLAPS SHALL BE PINNED WITH STAPLES OR NAILS BETWEEN 10 AND 12 INCHES LONG TO INSURE POSITIONING DURING PLACEMENT OF AGGREGATE. PIN LONGITUDINAL SEAMS AT 25 FOOT O. C. AND TRANSVERSE SEAMS EVERY 5 FEET OC.

D. THE AGGREGATE BASE AND SURFACE COURSES SHALL BE CONSTRUCTED IN LAYERS NOT MORE THAN 6 INCHES (COMPACTED) THICKNESS. AGGREGATE TO BE PLACED ON GEOTEXTILE FABRIC AND SHALL BE END-DUMPED ON THE FABRIC FROM THE FREE END OF THE FABRIC OR OVER PREVIOUSLY PLACED AGGREGATE. AT NO TIME SHALL EQUIPMENT BE PERMITTED ON THE ROADWAY WITH LESS THAN 6 INCHES OF MATERIAL COVERING THE FABRIC.

E. THE AGGREGATE SHALL BE IMMEDIATELY COMPACTED TO NOT LESS THAN 95% OF THE MAXIMUM DRY DENSITY AS PROVIDED BY THE PROCTOR TEST, ASTM D 1557 WITH A TAMPING ROLLER, A PNEUMATIC-TIRED ROLLER, OR WITH A VIBRATORY MACHINE OR ANY COMBINATION OF THE ABOVE. THE TOP LAYER SHALL BE GIVEN A FINAL ROLLING WITH A THREE-WHEEL OR TANDEM ROLLER.

3.6 FINISH GRADING

A. PERFORM ALL GRADING TO PROVIDE SMOOTH, EVEN SURFACE DRAINAGE OF THE ENTIRE AREA WITHIN THE LIMITS OF CONSTRUCTION. GRADING SHALL BE COMPATIBLE WITH ALL SURROUNDING TOPOGRAPHY AND STRUCTURES.

B. UTILIZE SATISFACTORY FILL MATERIALS RESULTING FROM THE EXCAVATION WORK IN THE CONSTRUCTION OF FILLS, EMBANKMENTS AND FOR THE REPLACEMENT OF REMOVED UNSUITABLE MATERIALS.

C. ACHIEVE FINISHED GRADE BY PLACING A MINIMUM OF 6 INCHES OF AB 3 ON TOP OF SOIL STABILIZER FABRIC.

D. REPAIR ALL ACCESS ROADS AND SURROUNDING AREAS USED DURING THE COURSE OF THIS WORK TO THEIR ORIGINAL CONDITION.

END OF SECTION

STATE OF MISSOURI
ROBERT E. JENSEN
NUMBER
PE-028974
PROFESSIONAL ENGINEER

PLANS PREPARED FOR:
SKW
11250 Corporate Ave.
Lenexa, Kansas 66219
Phone: 913-888-7800
Fax: 913-438-7868

PLANS PREPARED BY:
SSC
9900 West 109th Street, Suite 300
Overland Park, Kansas 66210
Phone: 913-438-7700
Fax: 913-438-7777

ENGINEERING LICENSE:

STATE OF MISSOURI

PE CERTIFICATE OF AUTHORIZATION #001640

ENGINEER:		PE #:	DISCIPLINE:	
MLO	MICHAEL L. OWENS	E-29056	STRUCTURAL/CIVIL	SC
KV	KEVIN VANMAELE	E-21561	STRUCTURAL/CIVIL	SC
REJ	ROBERT E. JENSEN	E-28974	STRUCTURAL/CIVIL	SC
TMS	TERRANCE M. SUPER	E-18521	ELECTRICAL	E
SDK	SHELTON D. KEISLING	E-27323	ELECTRICAL	E
DEK	DAVE E. KASPER	E-18063	ELECTRICAL	E

DRAWING NOTICE:

THIS DRAWING HAS NOT BEEN PUBLISHED AND IS THE SOLE PROPERTY OF SSC, INC. AND IS LENT TO THE BORROWER FOR THEIR CONFIDENTIAL USE ONLY, AND IN CONSIDERATION OF THE LOAN OF THIS DRAWING, THE BORROWER PROMISES AND AGREES TO RETURN IT UPON REQUEST AND AGREES THAT IT WILL NOT BE REPRODUCED, COPIED, LENT OR OTHERWISE DISPOSED OF DIRECTLY OR INDIRECTLY, NOR USED FOR ANY PURPOSE OTHER THAN FOR WHICH IT IS FURNISHED.

SUBMITTALS

DESCRIPTION	DATE	BY	REV
ISSUED FOR REVIEW	03/19/14	JRH	A
ISSUED FOR CONSTRUCTION	06/24/14	DCP	0

SITE NAME:

CLAY COUNTY TOWER

SITE NUMBER:

SITE ADDRESS:

16530 NE 116TH ST
KEARNEY, MISSOURI
64060

SHEET DESCRIPTION:

SPECIFICATIONS (4 OF 7)

SSC #:

SHEET NUMBER:

SP-4

FENCES AND GATES SECTION 32 31 00

PART 1 GENERAL

1.1 SUMMARY

A. PROVIDE FENCING AND GATES INCLUDING ALL ASSOCIATED POSTS, RAILS, BRACES, TERMINAL POSTS, AND RELATED MATERIALS AS SHOWN ON DRAWINGS.

1. TYPE A: GALVANIZED CHAIN LINK FENCING AND GATES

2. TYPE B: GALVANIZED CHAIN LINK FENCING AND GATES WITH BARBED WIRE

3. TYPE C: TREATED WOOD FENCING AND GATES

4. MATCH EXISTING FENCE

B. TERMINOLOGY:

1. CHAIN LINK CLASSIFICATION: GALVANIZED (ZINC COATED).

2. TREATED LUMBER: TREATED LUMBER SHALL BE "ACQ" OR APPROVED EQUAL. CCA WILL NOT BE ACCEPTED.

3. O.D.: OUTSIDE DIMENSION

1.2 QUALITY ASSURANCE

A. COMPLY WITH GOVERNING CODES AND REGULATIONS.

B. PROVIDE PRODUCTS OF ACCEPTABLE MANUFACTURERS, WHICH HAVE BEEN IN SATISFACTORY USE IN SIMILAR SERVICE FOR THREE YEARS. USE EXPERIENCED INSTALLERS.

1.3 SCHEDULING AND SEQUENCING

A. CERTAIN PORTIONS OF THE WORK MAY BE SPECIFIED TO BE COMPLETED AND OPERATIONAL PRIOR TO COMPLETION OF ALL WORK. SEQUENCE AND PROPERLY PROTECT EQUIPMENT TO PREVENT CONTAMINATION OR DAMAGE TO EQUIPMENT IN ADJACENT WORK AREAS.

B. STORAGE AND PROTECTION: STORE MATERIALS A MINIMUM OF 12 INCHES ABOVE GROUND.

2A PRODUCTS: CHAIN LINK FENCES AND GATES

2A.1 PRODUCTS

A. FENCE FABRIC, POSTS, TENSION WIRE, CORNER POSTS, AND APPURTENANCES SHALL CONFORM TO THE ASTM CODES AND STANDARDS FOR THE APPROPRIATE TYPE OF MATERIALS AS LISTED.

B. MATERIALS SHALL BE UNIFORM, CONSISTENT, AND MEET THE FOLLOWING REQUIREMENTS.

1. FENCE FABRIC: 72 INCHES HIGH (U.N.O.), HEAVY GALV. CHAIN LINK FENCE CONFORMING TO ASTM A392, CLASS 2, OF 2 INCH MESH 9 GAGE WIRE (0.148 INCHES IN DIAMETER), WITH THE TOP SELVAGE BARBED AND THE BOTTOM KNUCKLED.

2. LINE POSTS: FOR FABRIC UP TO AND INCLUDING SIX FEET IN HEIGHT, LINE POSTS SHALL BE GALV. SCHEDULE 40 PIPE WITH 1.90 INCH O.D. FOR FABRIC MORE THAN 8 FEET HIGH (IF REQUIRED TO MATCH EXISTING OR UNUSUAL SITE CONDITIONS), LINE POSTS SHALL BE GALV. SCHEDULE 40 PIPE WITH 2.375 INCH O.D COMPLY WITH ASTM F 1083.3.

3. END, CORNER, AND PULL POSTS: 2.375 INCH O.D.GALV. SCHED. 40 PIPE UP TO 6 FEET AND 2.875 INCH O.D. FOR FENCES OVER 6 FEET. COMPLY WITH ASTM F 1083.

4. GATE POSTS: GALV. SCHED. 40 PIPE WITH 2.875 INCH O.D. COMPLY WITH ASTM F 1083.

5. BRACE RODS (LOCATED ON EACH SIDE OF GATES AND EACH SIDE AT CORNERS): 1.66 INCH O.D. GALV. SCHED. 40.

6. TRUSS RODS / CROSS BRACING: 3/8 INCH DIAMETER DIAGONAL BARS WITH TURNBUCKLE.

7. TENSION WIRE: 7 GA. US STEEL WIRE GALV. PER ASTM A116 COATING CLASS III ATTACHED 1 INCH BELOW TOP SELVAGE AND 2' ABOVE BOTTOM SELVAGE OF FABRIC O.C. "BY MEANS OF HOG RINGS AT 24

8. APPURTENANCES SUCH AS BRACE BANDS, TENSION BANDS AND BARS: FABRICATED OF 1/8 INCH BY 7/8 INCH GALVANIZED STEEL WITH GALV. STEEL CARRIAGE BOLTS AND NUTS PER ASTM A123. TENSION BARS SHALL BE 1/4 BY 3/4 INCH GALV. STEEL BAR PER ASTM A153.

9. FABRIC TIES: CLASS I GALV. STEEL WIRE NO LESS THAN 9 GA.

10. POST TOPS: PROVIDED FOR EACH POST. MATERIALS SHALL BE PRESSED STEEL OR MALLEABLE IRON THAT PROVIDES WATERTIGHT CLOSURE CAP FOR TUBULAR POSTS AND SHALL BE GALV. PER ASTM A153.

11. BARBED WIRE: BARBED WIRE SHALL CONSIST OF DOUBLE STRANDED, 12-1 ½ GAGE O.C. THE TOP 1 FOOT "WIRE ASTM A121, CLASS 3 WITH 4 POINT BARBS SPACED 5 OF THE FENCE SHALL CONSIST OF 3 STRANDS OF BARBED WIRE ATTACHED TO A 45 DEGREE ANGLE WITH HEAVY PRESSED ARMS CAPABLE OF WITHSTANDING, WITHOUT FAILURE 250 POUNDS DOWNWARD PULL AT THE OUTERMOST END OF THE ARM.

12. GATES

a. GATE MATERIALS SUCH AS FABRIC, BOLTS, NUTS, AND TENSION BARS, SHALL BE CONSISTENT WITH FENCE MATERIALS. GATES SHALL CONSIST OF BOTH SINGLE AND DOUBLE SWING GATES AS SHOWN ON THE DRAWINGS.

b. GATES SHALL BE MANUALLY OPERATED.

c. GATE FRAMES SHALL BE 1.90 INCH O.D. PIPE TO BE FURNISHED WITH ALL NECESSARY FITTINGS, INCLUDING HEAVY DUTY COMMERCIAL DOUBLE GATE LATCH SIMILAR OR EQUAL TO DAC INDUSTRIES #4000.

PART 2B PRODUCTS: WOOD FENCES AND GATES

2B.1 PRODUCTS

A. FENCE MATERIALS, INCLUDING POSTS, RAILS, CORNER POSTS, AND PICKETS SHALL BE AS FOLLOWS:

1. END CORNER, GATE, AND PULL POSTS 8 FEET HIGH OR LESS SHALL BE 2 1/2 INCH NPS SCHEDULE 40 GALV. STEEL PIPE PER ASTM A120. (OUTSIDE DIAMETER OF 2.875 INCHES)

2. LINE POSTS UP TO 8 FEET HIGH, SHALL BE 2 INCH NPS GALVANIZED COLD-FORMED AND WELDED STEEL PIPE COMPLYING WITH ASTM F 1043 WITH AN OUTSIDE DIAMETER OF 2.375 INCHES OR PER ASTM A120.

3. TOP, MIDDLE, AND BOTTOM RAILS SHALL BE 2' X 4" TREATED LUMBER

4. PICKETS SHALL BE 1" X 6" TREATED LUMBER

B. TREATED LUMBER

1. ALL ABOVE GROUND MATERIALS SHALL BE TREATED WITH A MINIMUM OF .25 POUNDS OF PRESERVATIVE PER CUBIC FOOT OF MATERIAL.

2. TREATMENT FOR LUMBER SHALL BE APPROVED BY ALL GOVERNING BODIES.

C. GATES:

MANUALLY OPERATED WOOD GATES SHALL BE CONSTRUCTED WITH STEEL FRAME AND WOOD PICKETS. GATES SHALL BE SINGLE OR DOUBLE SWING AS INDICATED ON DRAWINGS.

D. PIPE GRIP TIES: PROVIDE PIPE GRIP TIES OF RECOMMENDED SIZE FOR USE WITH STEEL POSTS SIMPSON PGT'S. INSTALL PER MANUFACTURER'S RECOMMENDATIONS.

PART 3 EXECUTION

3.1 INSTALLATION

A. PHYSICAL LOCATIONS OF FEATURES SUCH AS FENCE LINES, GATES, TERMINAL POSTS SHALL BE PER THE PLANS.

B. INSTALL MATERIALS PER MANUFACTURER'S INSTRUCTIONS. COMPLY WITH ASTM F 567 FOR CHAIN LINK FENCES AND F 537 FOR WOOD FENCES. INSTALL MATERIALS WITH UNIFORM APPEARANCE. COORDINATE WITH OTHER SECTIONS.

C. PROVIDE A REASONABLY SMOOTH PROFILE AT FENCE LINE. BOTTOM OF FENCE SHALL NOT BE MORE THAN 2 INCHES ABOVE FINISHED GRADE. IF FENCE CROSSES EXTREME GRADE DEPRESSION, CONFORM THE FENCE TO THE GROUND CONTOUR, (U.N.O.). CLOSE SPACE BELOW THE BOTTOM OF THE FENCE WITH ADDITIONAL FENCE MATERIALS WHILE MAINTAINING A UNIFORM TOP.

D. POST SPACING AND INSTALLATION

1. INSTALL LINE POSTS AND BRACE AT INTERVALS NOT TO EXCEED 10 FEET AND 8 FEET FOR WOOD FENCES. POSTS SHALL BE EVENLY SPACED. LOCATE CORNER AND TERMINAL POSTS PER DRAWINGS. INSTALL CORNER POSTS WHERE CHANGES IN GRADE EXCEED 30 DEGREES.

2. SET POSTS VERTICALLY IN CYLINDRICAL CONCRETE FOUNDATION IN PER THE SCHEDULE IN TABLE 1 AND IN ACCORDANCE WITH ASTM F567.

TABLE 1 LINE, CORNER, PULL, AND TERMINAL POST INSTALLATION SCHEDULE

	FOUNDATION DIAMETER	FOUNDATION DEPTH	POST EMBEDMENT
LINE POST	0'-10"	3'-6"	3'-0"
TERMINAL POST	1'-0"	3'-6"	3'-0"
GATE POSTS	1'-6"	4'-0"	3'-6"

3. TOP SURFACE OF THE CONCRETE FOUNDATION SHALL BE SMOOTH 1/2 INCH CROWN, SLOPING AWAY FROM THE POST AND BE A MINIMUM OF 4 INCHES BELOW GRADE. THE POST SHALL BE 6 INCHES FROM THE BOTTOM OF THE CONCRETE POUR.

4. HOLES MAY BE HAND AUGURED OR DRILLED. IF ROCK IS ENCOUNTERED, DRILL MIN. 12 INCHES FOR LINE POSTS AND 18 INCHES FOR CORNER, GATE, OR TERMINAL POSTS. DRILL HOLES 1 INCH LARGER THAN SIZES IN TABLE 1. IF SOLID ROCK IS BELOW SOIL OVERBURDEN, DRILL TO FULL DEPTH REQUIRED, EXCEPT PENETRATION INTO ROCK NEED NOT EXCEED MINIMUM DEPTHS SPECIFIED.

E. SETTING POSTS

1. REMOVE ANY LOOSE AND FOREIGN MATERIALS FROM THE SIDES AND BOTTOMS OF THE HOLES; MOISTEN SOIL PRIOR TO PLACING THE CONCRETE. CENTER AND ALIGN POSTS, TAMP TO CONSOLIDATE, AND SECURE UNTIL CONCRETE IS FULLY CURED.

2. KEEP CONCRETE SURFACES MOIST FOR AT LEAST 7 DAYS AFTER PLACEMENT.

3. POSTS SET IN SLEEVED HOLES SHALL BE GROUTED IN PLACE USING A NON-SHRINK PORTLAND CEMENT GROUT APPROVED BY THE ENGINEER.

1. PRIOR TO PLACING COMPONENTS SUCH AS FABRIC, RAILS, TENSION WIRE, AND GATES, VERIFY THAT THE CONCRETE HAS REACHED AT LEAST 75% OF ITS DESIGN STRENGTH AS PRESCRIBED ON THE PLAN DETAILS, OR HAS CURED A MINIMUM OF 7 DAYS AFTER SETTING THE POSTS.

F. BRACING (CHAIN LINK FENCE ONLY)

1. INSTALL TENSION WIRES PARALLEL TO THE LINE OF FABRIC BY WEAVING NO LESS THAN 7 GA. WIRE OF THE APPROPRIATE TYPE THROUGH FABRIC AND TYING TO EACH POST. INSTALL TENSION WIRE BEFORE STRETCHING FABRIC.

2. INSTALL HORIZONTAL PIPE BRACE AT MID-HEIGHT ON EACH SIDE OF TERMINAL POSTS. FIRMLY ATTACH WITH FITTINGS. INSTALL DIAGONAL TRUSS RODS AT THESE POINTS. ADJUST TRUSS ROD, ENSURING POSTS REMAIN PLUMB.

G. INSTALLING FABRIC (CHAIN LINK FENCE ONLY)

1. INSTALL THE CHAIN LINK FENCE FABRIC SO THAT THE POSTS ARE ENCLOSED. STRETCH THE FABRIC TAUT, APPROXIMATELY 2 INCHES ABOVE THE GROUND, AND SECURELY TO THE POSTS.

2. CUT FABRIC AND ATTACH EACH SPAN INDEPENDENTLY AT ALL TERMINAL AND CORNER POSTS. USE STRETCHER BARS WITH FABRIC BANDS SPACED AT MAX. 5 INCH INTERVALS TO FASTEN FABRIC TO TERMINAL POSTS. USE TIE WIRE, METAL BANDS, OR OTHER APPROVED MATERIAL ATTACHED AT MAXIMUM 15 INCH INTERVALS TO FASTEN FABRIC TO LINE POSTS, TOP RAIL OR BOTTOM TENSION WIRE.

H. INSTALLING GATES

1. INSTALL GATES ACCORDING TO THE LOCATIONS, TYPE, AND SIZE INDICATED ON THE PLANS.

2. GATES SHALL BE BRACED AND TRUSSED TO PREVENT SAGGING, BUCKLING, AND WEAVING, AND COVERED WITH SAME FABRIC AS THE FENCE U.N.O. FIXED END RATCHET BANDS SHALL BE FURNISHED FOR FASTENING. FURNISH GATES WITH ALL FITTINGS AND HARDWARE REQUIRED. HEAVY DUTY COMMERCIAL LATCHES PROVIDED FOR USE WITH PADLOCK AND HINGES SHALL ALLOW 180 DEGREE SWING. PROVIDE 3/8 INCH DIAMETER CROSSBRACING.

3. INSTALL GATES PLUMB, LEVEL, AND SECURE FOR THE FULL OPENING WITHOUT INTERFERENCES

4. INSTALL ALL ITEMS PER MANUFACTURER'S RECOMMENDATIONS. INSPECT ALL PARTS AND ATTACHMENTS FOR DEFECTS, AND INSTALL, LUBRICATE, AND ADJUST EQUIPMENT TO ENSURE SMOOTH OPERATION.

5. INSTALL (WELD TO GATE FRAME) TWO 8 INCH SECTIONS (ONE PER GATE) OF ¼ INCH NOMINAL WELDED, GRADE 30 MINIMUM GALVANIZED STEEL CHAIN JUST BELOW LATCH FOR PADLOCKS. VERIFY INSIDE DIMENSIONS OF CHAIN LINK WILL RECEIVE STANDARD PADLOCKS.

I. MISCELLANEOUS INSTALLATION (CHAIN LINK FENCE)

1. USE U-SHAPED TIE WIRES, CONFORMING TO THE DIAMETERS OF PIPE, THAT CLASP THE PIPE AND FABRIC FIRMLY WITH ENDS TWISTED AT LEAST 2 FULL TURNS.

2. INSTALL NUTS FOR FASTENERS ON TENSION BANDS AND HARDWARE BOLTS ON THE SIDE OF THE FENCE OPPOSITE THE FABRIC. THE ENDS OF BOLTS, ONCE SECURE AND CHECKED FOR SMOOTH OPERATION, SHALL BE PEENED TO PREVENT REMOVAL OF NUTS.

3.2 PROTECTION

A. A GUARANTEE SHALL BE FURNISHED FOR ALL MATERIALS, INSTALLATION, AND WORKMANSHIP TO BE FREE OF DEFECTS FOR A PERIOD OF 1 YEAR FROM THE DATE OF ACCEPTANCE UNLESS NOTED OTHERWISE IN THE CONTRACT DOCUMENTS. ANY DEFECT IN INSTALLATION OR WORKMANSHIP SHALL BE REPAIRED, AND/OR REPLACED WITHOUT COST TO THE OWNER.

B. REPAIR COATINGS DAMAGED IN THE FIELD AS RECOMMENDED BY THE MANUFACTURER.

END OF SECTION

STATE OF MISSOURI
ROBERT E. JENSEN
NUMBER
PE-028974
PROFESSIONAL ENGINEER
06/24/14

PLANS PREPARED FOR:

SKW®
11250 Corporate Ave.
Lenexa, Kansas 66219
Phone: 913-888-7800
Fax: 913-438-7868

PLANS PREPARED BY:

SSC
9900 West 109th Street, Suite 300
Overland Park, Kansas 66210
Phone: 913-438-7700
Fax: 913-438-7777

ENGINEERING LICENSE:

STATE OF MISSOURI

PE CERTIFICATE OF AUTHORIZATION #001640

ENGINEER:		PE #:	DISCIPLINE:	
MLO	MICHAEL L. OWENS	E-29058	STRUCTURAL/CIVIL	SC
KV	KEVIN VANMAELE	E-21561	STRUCTURAL/CIVIL	SC
REJ	ROBERT E. JENSEN	E-28974	STRUCTURAL/CIVIL	SC
TMS	TERRANCE M. SUPER	E-18521	ELECTRICAL	E
SDK	SHELTON D. KEISLING	E-27323	ELECTRICAL	E
DEK	DAVE E. KASPER	E-18063	ELECTRICAL	E

DRAWING NOTICE:

THIS DRAWING HAS NOT BEEN PUBLISHED AND IS THE SOLE PROPERTY OF SSC, INC. AND IS LENT TO THE BORROWER FOR THEIR CONFIDENTIAL USE ONLY, AND IN CONSIDERATION OF THE LOAN OF THIS DRAWING, THE BORROWER PROMISES AND AGREES TO RETURN IT UPON REQUEST AND AGREES THAT IT WILL NOT BE REPRODUCED, COPIED, LENT OR OTHERWISE DISPOSED OF DIRECTLY OR INDIRECTLY, NOR USED FOR ANY PURPOSE OTHER THAN FOR WHICH IT IS FURNISHED.

SUBMITTALS

DESCRIPTION	DATE	BY	REV
ISSUED FOR REVIEW	03/19/14	JRH	A
ISSUED FOR CONSTRUCTION	06/24/14	DCP	0

SITE NAME:

CLAY COUNTY TOWER

SITE NUMBER:

SITE ADDRESS:

16530 NE 116TH ST
KEARNEY, MISSOURI
64060

SHEET DESCRIPTION:

SPECIFICATIONS (5 OF 7)

SSC #:

SHEET NUMBER:

SP-5

SECTION 16000 ELECTRICAL

PART 1 GENERAL

1.1 GENERAL CONDITIONS:

A. THE CONTRACTOR SHALL INSPECT THE SITE WHERE THIS WORK IS TO BE PERFORMED AND FULLY FAMILIARIZE HIMSELF WITH ALL CONDITIONS RELATED TO THIS PROJECT.

B. THE CONTRACTOR SHALL OBTAIN AND PAY FOR ALL PERMITS AND LICENSES AND SHALL MAKE ALL DEPOSITS AND PAY ALL FEES REQUIRED FOR THE PERFORMANCE OF WORK UNDER THIS SECTION.

C. DRAWINGS SHOW THE GENERAL ARRANGEMENT OF ALL SYSTEMS AND COMPONENTS COVERED UNDER THIS SECTION. THE CONTRACTOR SHALL VERIFY ALL DIMENSIONS. DRAWINGS SHALL NOT BE SCALED TO DETERMINE DIMENSIONS.

1.2 LAWS, REGULATIONS, ORDINANCES, STATUTES AND CODES.

A. ALL WORK SHALL BE INSTALLED IN ACCORDANCE WITH THE NATIONAL ELECTRICAL CODE, AND ALL APPLICABLE LOCAL LAWS, REGULATIONS, ORDINANCES, STATUTES AND CODES.

1.3 REFERENCES:

A. THE PUBLICATIONS LISTED BELOW FORM PART OF THIS SPECIFICATION. EACH PUBLICATION SHALL BE THE LATEST REVISION AND ADDENDUM IN EFFECT ON THE DATE THIS SPECIFICATION IS ISSUED FOR CONSTRUCTION UNLESS OTHERWISE NOTED. EXCEPT AS MODIFIED BY THE REQUIREMENTS SPECIFIED HEREIN OR THE DETAILS OF THE DRAWINGS, WORK INCLUDED IN THIS SPECIFICATION SHALL CONFORM TO THE APPLICABLE PROVISIONS OF THESE PUBLICATIONS.

1. ANSI/IEEE (AMERICAN NATIONAL STANDARDS INSTITUTE)
2. IEEE (INSTITUTE OF ELECTRICAL AND ELECTRONICS ENGINEERS)
3. ASTM (AMERICAN SOCIETY FOR TESTING AND MATERIALS)
4. ICEA (INSULATED CABLE ENGINEERS ASSOCIATION)
5. NEMA (NATIONAL ELECTRICAL MANUFACTURER'S ASSOCIATION)
6. NFPA (NATIONAL FIRE PROTECTION ASSOCIATION)
7. OSHA (OCCUPATIONAL SAFETY AND HEALTH ADMINISTRATION)
8. UL (UNDERWRITERS LABORATORIES, INC.)

1.4 SCOPE OF WORK:

A. WORK UNDER THIS SECTION SHALL CONSIST OF FURNISHING ALL LABOR, MATERIAL AND ASSOCIATED SERVICES REQUIRED TO COMPLETELY CONSTRUCT AND LEAVE READY FOR OPERATION SYSTEMS AS SHOWN ON THE DRAWINGS AND HEREIN DESCRIBED.

B. ALL ELECTRICAL EQUIPMENT UNDER THIS CONTRACT SHALL BE PROPERLY TESTED, ADJUSTED, AND ALIGNED BY THE CONTRACTOR.

C. THE CONTRACTOR SHALL BE RESPONSIBLE FOR ALL EXCAVATING, DRAINING, TRENCHES, BACKFILLING, AND REMOVAL OF EXCESS DIRT.

D. THE CONTRACTOR SHALL FURNISH TO THE OWNER, CERTIFICATES OF FINAL INSPECTION AND APPROVAL FROM THE INSPECTION AUTHORITIES HAVING JURISDICTION.

PART 2 PRODUCTS

2.1 GENERAL:

A. ALL ITEMS OF MATERIALS AND EQUIPMENT SHALL BE NEW, FREE FROM DEFECTS AND OF THE BEST QUALITY NORMALLY USED FOR THE PURPOSE IN GOOD COMMERCIAL PRACTICE.

B. ALL MATERIALS AND EQUIPMENT SHALL BE ACCEPTABLE TO THE AUTHORITY HAVING JURISDICTION AS SUITABLE FOR THE USE INTENDED.

C. ALL EQUIPMENT SHALL BEAR THE UNDERWRITERS LABORATORIES LABEL OF APPROVAL, AND SHALL CONFORM TO REQUIREMENTS OF THE NATIONAL ELECTRICAL CODE.

D. ALL OVERCURRENT DEVICES SHALL HAVE AN INTERRUPTING RATING EQUAL TO OR GREATER THAN THE SHORT CIRCUIT CURRENT TO WHICH THEY ARE SUBJECTED, 10,000 AIC MINIMUM. VERIFY AVAILABLE SHORT CIRCUIT CURRENT DOES NOT EXCEED THE RATING OF ELECTRICAL EQUIPMENT.

2.2 MATERIALS AND EQUIPMENT:

A. CONDUIT:

1. RIGID GALVANIZED STEEL CONDUIT (RGS) SHALL BE HOT-DIP GALVANIZED INSIDE AND OUTSIDE INCLUDING ENDS AND THREADS AND ENAMELED OR LACQUERED INSIDE IN ADDITION TO GALVANIZING.
2. FLEXIBLE METAL CONDUIT SHALL BE GALVANIZED, ZINC-COATED STEEL, PVC COATED FOR OUTDOOR APPLICATIONS.
3. CONDUIT CLAMPS, STRAPS AND SUPPORTS SHALL BE STEEL OR MALLEABLE IRON. ALL FITTINGS SHALL BE COMPRESSION TYPE AND WATERTIGHT.
4. NON-METALLIC CONDUIT AND FITTINGS SHALL BE SCHEDULE 40 PVC, HEAVY-WALL RIGID WITH SOLVENT-CEMENT--TYPE JOINTS AS RECOMMENDED BY THE MANUFACTURER.

B. WIRE AND CABLE:

1. WIRE AND CABLE SHALL BE FLAME--RETARDANT, MOISTURE AND HEAT RESISTANT THERMOPLASTIC, SINGLE CONDUCTOR, COPPER, TYPE THHN/THWN, 600 VOLT, SIZES AS INDICATED, #12 AWG MINIMUM.
2. #10 AWG AND SMALLER CONDUCTORS SHALL BE SOLID AND #8 AWG AND LARGER CONDUCTORS SHALL BE STRANDED.
3. SOLDERLESS, PRESSURE-TYPE CONNECTORS CONSTRUCTED OF HIGH- STRENGTH, NON-CORRODIBLE, TIN-PLATED COPPER DESIGNED TO FURNISH HIGH- PULLOUT STRENGTH AND HIGH CONDUCTIVITY JOINTS SHALL BE USED.
4. SUPPORT GRIPS SHALL BE SINGLE WEAVE, CLOSED MESH, HIGH-GRADE, NON-MAGNETIC, TIN-COATED BRONZE CAPABLE OF SUPPORTING TEN TIMES THE CABLE DEAD WEIGHT, HUBBELL KELLEMS OR APPROVED EQUAL.

C. DISCONNECT SWITCHES:

1. DISCONNECT SWITCHES SHALL BE HEAVY DUTY, DEAD-FRONT, QUICK-MAKE, QUICK-BREAK, EXTERNALLY OPERABLE, HANDLE LOCKABLE AND INTERLOCKED WITH COVER IN CLOSED POSITION, RATING AS INDICATED, UL LABELED FURNISHED IN NEMA 3R ENCLOSURE, SQUARE D CLASS 3110 OR APPROVED EQUAL.

D. SYSTEM GROUNDING:

1. GROUNDING CONDUCTOR SHALL BE BARE, STRANDED, COPPER, SIZE AS INDICATED, EXCEPT ABOVE GROUND GROUNDING CONDUCTORS SHALL BE INSULATED.
2. GROUND BUSSES SHALL BE BARE ANNEALED COPPER BARS OF RECTANGULAR CROSS SECTION.
3. CONNECTORS SHALL BE HIGH-CONDUCTIVITY, HEAVY DUTY, LISTED AND LABELED AS GROUNDING CONNECTORS FOR THE MATERIALS USED. USE TWO--HOLE COMPRESSION LUGS WITH HEAT SHRINK FOR MECHANICAL CONNECTIONS.
4. EXOTHERMIC WELDED CONNECTIONS SHALL BE PROVIDED IN KIT FORM AND SELECTED FOR THE SPECIFIC TYPES, SIZES, AND COMBINATIONS OF CONDUCTORS AND OTHER ITEMS TO BE CONNECTED.
5. GROUND RODS SHALL BE COPPER-CLAD STEEL WITH HIGH-STRENGTH STEEL CORE AND ELECTROLYTIC--GRADE COPPER OUTER SHEATH, MOLTEN WELDED TO CORE, 3/4" x 10'-0".

E. OTHER MATERIALS:

1. THE CONTRACTOR SHALL PROVIDE OTHER MATERIALS, THOUGH NOT SPECIFICALLY DESCRIBED, WHICH ARE REQUIRED FOR A COMPLETELY OPERATIONAL SYSTEM AND PROPER INSTALLATION OF THE WORK.

STATE OF MISSOURI
SHELTON KEISLING
NUMBER
E-27323
6-30-14
PROFESSIONAL ENGINEER

PLANS PREPARED FOR:

SKW
11250 Corporate Ave.
Lenexa, Kansas 66219
Phone: 913-888-7800
Fax: 913-438-7868

PLANS PREPARED BY:

SSC
9900 West 109th Street, Suite 300
Overland Park, Kansas 66210
Phone: 913-438-7700
Fax: 913-438-7777

ENGINEERING LICENSE:

STATE OF MISSOURI
PE CERTIFICATE OF AUTHORIZATION #001640

ENGINEER:		PE #:	DISCIPLINE:	
MLO	MICHAEL L. OWENS	E-29058	STRUCTURAL/CIVIL	SC
KV	KEVIN VANHAELE	E-21561	STRUCTURAL/CIVIL	SC
REJ	ROBERT E. JENSEN	E-28974	STRUCTURAL/CIVIL	SC
TMS	TERRANCE M. SUPER	E-18521	ELECTRICAL	E
SDK	SHELTON D. KEISLING	E-27323	ELECTRICAL	E
DEK	DAVE E. KASPER	E-18063	ELECTRICAL	E

DRAWING NOTICE:

THIS DRAWING HAS NOT BEEN PUBLISHED AND IS THE SOLE PROPERTY OF SSC, INC. AND IS LENT TO THE BORROWER FOR THEIR CONFIDENTIAL USE ONLY, AND IN CONSIDERATION OF THE LOAN OF THIS DRAWING, THE BORROWER PROMISES AND AGREES TO RETURN IT UPON REQUEST AND AGREES THAT IT WILL NOT BE REPRODUCED, COPIED, LENT OR OTHERWISE DISPOSED OF DIRECTLY OR INDIRECTLY, NOR USED FOR ANY PURPOSE OTHER THAN FOR WHICH IT IS FURNISHED.

SUBMITTALS

DESCRIPTION	DATE	BY	REV
ISSUED FOR REVIEW	03/19/14	JRH	A
ISSUED FOR CONSTRUCTION	06/24/14	DCP	0

SITE NAME:

CLAY COUNTY TOWER

SITE NUMBER:

SITE ADDRESS:

16530 NE 116TH ST
KEARNEY, MISSOURI
64060

SHEET DESCRIPTION:

SPECIFICATIONS (6 OF 7)

SSC #:

SHEET NUMBER:

SP-6

PART 3 EXECUTION

3.1 GENERAL:

A. ALL MATERIALS AND EQUIPMENT SHALL BE INSTALLED IN STRICT ACCORDANCE WITH THE MANUFACTURER'S RECOMMENDATIONS.

B. EQUIPMENT SHALL BE TIGHTLY COVERED AND PROTECTED AGAINST DIRT OR WATER, AND AGAINST CHEMICAL OR MECHANICAL INJURY DURING INSTALLATION AND CONSTRUCTION PERIODS.

3.2 LABOR AND WORKMANSHIP:

A. ALL LABOR FOR THE INSTALLATION OF MATERIALS AND EQUIPMENT FURNISHED FOR THE ELECTRICAL SYSTEM SHALL BE DONE BY EXPERIENCED MECHANICS OF THE PROPER TRADES.

B. ALL ELECTRICAL EQUIPMENT FURNISHED SHALL BE ADJUSTED, ALIGNED AND TESTED BY THE CONTRACTOR AS REQUIRED TO PRODUCE THE INTENDED PERFORMANCE.

C. UPON COMPLETION OF THE WORK, THE CONTRACTOR SHALL THOROUGHLY CLEAN ALL EXPOSED EQUIPMENT, REMOVE ALL LABELS AND ANY DEBRIS, CRATING OR CARTONS AND LEAVE THE INSTALLATION FINISHED AND READY FOR OPERATION.

3.3 COORDINATION:

A. THE CONTRACTOR SHALL COORDINATE THE INSTALLATION OF ELECTRICAL ITEMS WITH THE OWNER–FURNISHED EQUIPMENT DELIVERY SCHEDULE TO PREVENT UNNECESSARY DELAYS IN THE TOTAL WORK.

3.4 INSTALLATION:

A. CONDUIT:

1. ALL ELECTRICAL WIRING SHALL BE INSTALLED IN CONDUIT AS HEREIN SPECIFIED. NO CONDUIT OR TUBING OF LESS THAN 3/4 INCH NOMINAL SIZE SHALL BE USED.

2. PROVIDE RGS CONDUIT FOR ALL EXPOSED, EXTERIOR CONDUIT.

3. PROVIDE SCHEDULE 40 PVC OR RGS CONDUIT BELOW GRADE, 1" MINIMUM, UNLESS NOTED OTHERWISE. ALL 90 DEGREE BENDS TO ABOVE GRADE SHALL BE RGS. MINIMUM BURIAL DEPTH SHALL BE 24" CLEAR TO TOP OF CONDUIT, UNLESS NOTED OTHERWISE.

4. USE GALVANIZED FLEXIBLE STEEL CONDUIT WHERE DIRECT CONNECTION IS NOT DESIRABLE FOR REASONS OF EQUIPMENT MOVEMENT, VIBRATION, OR FOR EASE OF MAINTENANCE. USE LIQUIDTIGHT, PVC COATED FLEXIBLE METAL CONDUIT FOR OUTDOOR APPLICATIONS.

5. INSTALL GALVANIZED FLEXIBLE STEEL CONDUIT AT ALL POINTS OF CONNECTION TO EQUIPMENT MOUNTED ON SUPPORTS TO ALLOW FOR EXPANSION AND CONTRACTION.

6. A RUN OF CONDUIT BETWEEN BOXES OR FITTINGS SHALL NOT CONTAIN MORE THAN THE EQUIVALENT OF FOUR QUARTER–BENDS INCLUDING THOSE BENDS LOCATED IMMEDIATELY AT THE BOX OR FITTING. THE RADIUS OF BENDS SHALL NEVER BE SHORTER THAN THAT OF THE CORRESPONDING TRADE ELBOW.

7. WHERE CONDUIT HAS TO BE CUT IN THE FIELD, IT SHALL BE CUT SQUARE WITH A PIPE CUTTER USING CUTTING KNIVES.

8. ALL CONDUITS SHALL BE SWABBED CLEAN BY PULLING AN APPROPRIATE SIZE MANDREL THROUGH THE CONDUIT BEFORE INSTALLATION OF WIRE OR CABLE. CLEAR ALL BLOCKAGES AND REMOVE BURRS, DIRT, AND DEBRIS.

9. INSTALL PULL STRINGS IN ALL EMPTY CONDUITS. IDENTIFY PULL STRINGS AT EACH END WITH ITS DESTINATION.

10. PROVIDE INSULATED GROUNDING BUSHINGS FOR ALL CONDUITS STUBBED INTO EQUIPMENT ENCLOSURES OR STUBBED OUT FOR FUTURE USE BY OTHERS.

11. CONTRACTOR IS RESPONSIBLE FOR PROTECTING ALL CONDUITS DURING CONSTRUCTION. TEMPORARY OPENINGS IN THE CONDUIT SYSTEM SHALL BE PLUGGED OR CAPPED TO PREVENT ENTRANCE OF MOISTURE OR FOREIGN MATTER. CONTRACTOR SHALL REPLACE ANY CONDUITS CONTAINING FOREIGN MATERIALS THAT CANNOT BE REMOVED.

12. INSTALL 2" ORANGE DETECTABLE TAPE 12" ABOVE ALL UNDERGROUND CONDUIT AND WIRE.

13. CONDUITS SHALL BE INSTALLED IN SUCH A MANNER AS TO INSURE AGAINST COLLECTION OF TRAPPED CONDENSATION.

B. WIRE AND CABLE:

1. ALL POWER WIRING SHALL BE COLOR CODED AS FOLLOWS:

DESCRIPTION	120/240V	208Y/120V	480Y/277V
PHASE A	BLACK	BLACK	BROWN
PHASE B	RED	RED	ORANGE
PHASE C		BLUE	YELLOW
NEUTRAL	WHITE	WHITE	GRAY
GROUND	GREEN	GREEN	GREEN

2. SPLICES SHALL BE MADE ONLY AT OUTLETS, JUNCTION BOXES, OR ACCESSIBLE RACEWAYS WITH PRESSURE–TYPE CONNECTORS.

3. PULLING LUBRICANTS SHALL BE SOAPSTONE POWDER, POWDERED TALC, OR A COMMERCIAL PULLING COMPOUND. NO SOAP SUDS, SOAP FLAKES, OIL, OR GREASE SHALL BE USED, AS THESE MAY BE HARMFUL TO CABLE INSULATION. CONTRACTOR SHALL USE NYLON OR HEMP ROPE FOR PULLING CABLE TO AVOID SCORING THE CONDUIT.

4. CABLES SHALL BE NEATLY TRAINED, WITHOUT INTERLACING, AND BE OF SUFFICIENT LENGTH IN ALL BOXES, EQUIPMENT, ETC. TO PERMIT MAKING A NEAT ARRANGEMENT. CABLES SHALL BE SECURED IN A MANNER TO AVOID TENSION ON CONDUCTORS OR TERMINALS, AND SHALL BE PROTECTED FROM MECHANICAL INJURY AND FROM MOISTURE. SHARP BENDS OVER CONDUIT BUSHINGS ARE PROHIBITED. DAMAGED CABLES SHALL BE REMOVED AND REPLACED AT THE CONTRACTOR'S EXPENSE.

C. DISCONNECT SWITCHES:

1. INSTALL DISCONNECT SWITCHES LEVEL AND PLUMB. CONNECT TO WIRING SYSTEM AND GROUND AS INDICATED.

D. GROUNDING:

1. ALL METALLIC PARTS OF ELECTRICAL EQUIPMENT WHICH DO NOT CARRY CURRENT SHALL BE GROUNDED IN ACCORDANCE WITH THE REQUIREMENTS OF ARTICLE 250 OF THE NATIONAL ELECTRICAL CODE.

2. PROVIDE ELECTRICAL GROUNDING AND BONDING SYSTEMS INDICATED WITH ASSEMBLY OF MATERIALS, INCLUDING GROUNDING ELECTRODES, BONDING JUMPERS AND ADDITIONAL ACCESSORIES AS REQUIRED FOR A COMPLETE INSTALLATION.

3. ROUTE GROUNDING CONNECTIONS AND CONDUCTORS TO GROUND IN THE SHORTEST AND STRAIGHTEST PATHS POSSIBLE TO MINIMIZE TRANSIENT VOLTAGE RISES.

4. TIGHTEN GROUNDING AND BONDING CONNECTORS, INCLUDING SCREWS AND BOLTS, IN ACCORDANCE WITH MANUFACTURER'S PUBLISHED TORQUE TIGHTENING VALUES FOR CONNECTORS AND BOLTS. WHERE MANUFACTURER'S TORQUING REQUIREMENTS ARE NOT AVAILABLE, TIGHTEN CONNECTIONS TO COMPLY WITH TIGHTENING TORQUE VALUES SPECIFIED IN UL 486A TO ASSURE PERMANENT AND EFFECTIVE GROUNDING.

5. ALL UNDERGROUND GROUNDING CONNECTIONS SHALL BE MADE BY THE EXOTHERMIC WELD PROCESS AND INSTALLED IN ACCORDANCE WITH THE MANUFACTURER'S INSTRUCTIONS.

6. ALL GROUND CONNECTIONS SHALL BE INSPECTED FOR TIGHTNESS. EXOTHERMIC–WELDED CONNECTIONS SHALL BE APPROVED BY THE CONSTRUCTION INSPECTOR BEFORE BEING PERMANENTLY CONCEALED.

7. APPLY CORROSION–RESISTANT FINISH TO FIELD CONNECTIONS, AND PLACES WHERE FACTORY APPLIED PROTECTIVE COATINGS HAVE BEEN DESTROYED. USE COPPER–BASED "NO–OX" OR APPROVED EQUAL.

8. A SEPARATE, CONTINUOUS, INSULATED EQUIPMENT GROUNDING CONDUCTOR SHALL BE INSTALLED IN ALL FEEDER AND BRANCH CIRCUITS

9. BOND ALL INSULATED GROUNDING BUSHINGS WITH A BARE #6 AWG GROUNDING CONDUCTOR TO A GROUND BUS OR GROUNDING LUG IN ENCLOSURE.

10. DIRECT BURIED GROUND CONDUCTORS SHALL BE INSTALLED AT A NOMINAL DEPTH OF 30" BELOW GRADE, UNLESS NOTED OTHERWISE.

11. ALL GROUNDING CONDUCTORS EMBEDDED IN OR PENETRATING CONCRETE SHALL BE INSULATED OR INSTALLED IN PVC CONDUIT.

12. INSTALL ELECTROLYTIC GROUNDING SYSTEM IN STRICT ACCORDANCE WITH MANUFACTURER'S INSTRUCTIONS. REMOVE SEALING TAPE FROM LEACHING AND BREATHER HOLES. INSTALL PROTECTIVE BOX FLUSH WITH GRADE.

13. DRIVE GROUND RODS UNTIL TOPS ARE 30 INCHES BELOW FINAL GRADE.

14. GROUNDING CONDUCTOR TO EQUIPMENT GROUND LUGS:

1) BOLTED TO EQUIPMENT HOUSING WITH STAINLESS STEEL BOLTS AND LOCK WASHERS.
2) ALL EQUIPMENT TO BE GROUNDED SHALL BE FREE OF PAINT OR ANY OTHER MATERIAL COVERING BARE METAL AT THE POINT OF CONNECTION.

3.5 ACCEPTANCE TESTING:

1. PROVIDE PERSONNEL AND EQUIPMENT, MAKE REQUIRED TESTS, AND SUBMIT TEST REPORTS UPON COMPLETION OF TESTS.

2. WHEN MATERIAL AND/OR WORKMANSHIP IS FOUND NOT TO COMPLY WITH THE SPECIFIED REQUIREMENTS, THE NONCOMPLYING ITEMS SHALL BE REMOVED FROM THE JOBSITE AND REPLACED WITH ITEMS COMPLYING WITH THE SPECIFIED REQUIREMENTS PROMPTLY AFTER RECEIPT OF NOTICE OF SUCH NON–COMPLIANCE.

A. TEST PROCEDURES:

1. ALL FEEDERS SHALL HAVE THEIR INSULATION TESTED AFTER INSTALLATION, BUT BEFORE CONNECTION TO DEVICES. THE CONDUCTORS SHALL TEST FREE FROM SHORT CIRCUITS AND GROUNDS. –TESTING SHALL BE FOR ONE MINUTE USING 1000V DC. INVESTIGATE ANY VALUES LESS THAN 50 MEGOHMS.

2. PRIOR TO ENERGIZING CIRCUITRY, TEST WIRING DEVICES FOR ELECTRICAL CONTINUITY AND PROPER POLARITY CONNECTIONS.

3. MEASURE AND RECORD VOLTAGES BETWEEN PHASES AND BETWEEN PHASE WIRES AND NEUTRALS. SUBMIT A REPORT OF MAXIMUM AND MINIMUM VOLTAGES.

4. PERFORM GROUND TEST TO MEASURE GROUND RESISTANCE OF GROUNDING SYSTEM USING THE IEEE STANDARD 3–POINT "FALL–OF–POTENTIAL" METHOD. PROVIDE PLOTTED TEST VALUES & LOCATION SKETCH. NOTIFY THE ENGINEER IMMEDIATELY IF MEASURED VALUE IS OVER 5 OHMS.

END OF SECTION

END OF SPECIFICATION

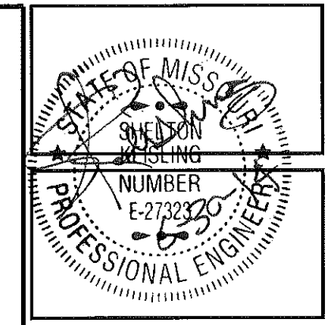

PLANS PREPARED FOR:

SKW

11250 Corporate Ave.
Lenexa, Kansas 66219
Phone: 913-888-7800
Fax: 913-438-7868

PLANS PREPARED BY:

SSC

9900 West 109th Street, Suite 300
Overland Park, Kansas 66210
Phone: 913-438-7700
Fax: 913-438-7777

ENGINEERING LICENSE:

STATE OF MISSOURI

PE CERTIFICATE OF AUTHORIZATION #001840

ENGINEER:		PE #:	DISCIPLINE:	
MLO	MICHAEL L. OWENS	E-29058	STRUCTURAL/CIVIL	SC
KV	KEVIN VANMAELE	E-21561	STRUCTURAL/CIVIL	SC
REJ	ROBERT E. JENSEN	E-26974	STRUCTURAL/CIVIL	SC
TMS	TERRANCE M. SUPER	E-18521	ELECTRICAL	E
SDK	SHELTON D. KEISLING	E-27323	ELECTRICAL	E
DEK	DAVE E. KASPER	E-18063	ELECTRICAL	E

DRAWING NOTICE:

THIS DRAWING HAS NOT BEEN PUBLISHED AND IS THE SOLE PROPERTY OF SSC, INC. AND IS LENT TO THE BORROWER FOR THEIR CONFIDENTIAL USE ONLY, AND IN CONSIDERATION OF THE LOAN OF THIS DRAWING, THE BORROWER PROMISES AND AGREES TO RETURN IT UPON REQUEST AND AGREES THAT IT WILL NOT BE REPRODUCED, COPIED, LENT OR OTHERWISE DISPOSED OF DIRECTLY OR INDIRECTLY, NOR USED FOR ANY PURPOSE OTHER THAN FOR WHICH IT IS FURNISHED.

SUBMITTALS

DESCRIPTION	DATE	BY	REV
ISSUED FOR REVIEW	03/19/14	JRH	A
ISSUED FOR CONSTRUCTION	06/24/14	DCP	0

SITE NAME:

CLAY COUNTY TOWER

SITE NUMBER:

SITE ADDRESS:

16530 NE 116TH ST
KEARNEY, MISSOURI
64060

SHEET DESCRIPTION:

SPECIFICATIONS (7 OF 7)

SSC #:

SHEET NUMBER:

SP-7